10/2016

Mod: E60/4P6T

Production code: 60/60 PCE

Diamond

catering equipment

UK	RANGE, GAS SOLID TOP 600-650 Installation-Use-Maintenance

MOD.			
_60/30 PCG…	_60/30 PCE…	_CEG/70	_65/110 CFG
_60/60 PCG…	_60/60 PCE…	_CEG/110	_65/110 CFGE
_60/90 PCG…	_60/90 PCE…	_65/40 PG/40 P	_65/110 CFGG
_60/60 CFG	_60/60 CFE	_65/40 PCG	_65/40 PCE
_60/60 CFGE	_60/60 CFE/P 2/3	_65/70 PCG	_65/70 PCE
_60/60 CFGE/P 2/3	_60/90 CFE	_65/70 CFG	_65/70 CFE
_60/90 CFGE	_60/90 CFE/P	_65/70 CFGE	_65/70 TPG
_60/90 CFGE/P	_60/40 PCE-D	_65/40 PCG/P	_65/70 TPFG
_60/40 PCG-D	_60/60 PCE-D	_65/70 PCG/P	_65/110 TPFG
_60/60 PCG-D		_65/70 CFG/P	_FPG/55
		_65/70 CFGE/P	_FPE/55

Doc.n°	252.453.00
Edition	03

UK - INSTALLATION – USE - MAINTENANCE 22

I. GENERAL PRESCRIPTIONS 22
1. DISPOSAL OF PACKING AND OF THE APPLIANCE 22
2. SAFETY DEVICES 23
II. INSTRUCTIONS FOR INSTALLATION 23
3. REMINDERS FOR THE INSTALLER 23
4. REFERENCE STANDARDS AND LAWS 23
5. UNPACKING 24
6. POSITIONING 24
7. CONNECTIONS 24
8. CONVERSION TO ANOTHER TYPE OF GAS 25
9. COMMISSIONING 26
III. INSTRUCTIONS FOR USE 27
10. REMINDERS FOR THE USER 27
11. USING THE GAS HOB 27
12. USING THE HOTPLATE/SIMPLE SERVICE 28
13. GAS OVEN 600 SERIES USE 29
14. GAS OVEN 650 SERIES USE 29
15. GAS STOCKPOT STOVE USE 30
16. ELECTRIC COOK TOP/ELECTRIC STOCKPOT STOVE USE 30
17. ELECTRIC CONVECTION OVEN USE 31
18. ELECTRIC MULTIFUNCTION OVEN (600 SERIES) USE 31
19. PROLONGED DISUSE 32
IV. INSTRUCTIONS FOR CLEANING 32
20. REMINDERS FOR CLEANING 32
V. INSTRUCTIONS FOR MAINTENANCE 33
21. REMINDERS FOR THE MAINTENANCE TECHNICIAN 33
22. CONVERSION TO ANOTHER TYPE OF GAS 33
23. COMMISSIONING 33
24. TROUBLESHOOTING 33
25. REPLACING COMPONENTS 34
26. CLEANING THE INTERIOR 36
27. MAIN COMPONENTS 36
VI. SCHEMI DI INSTALLAZIONE – INSTALLATIONS PLAN - INSTALLATION DIAGRAM – SCHEMA D'INSTALLATION – ESQUEMA DE INSTALACION - INSTALLATIESCHEMA'S 101
VII. FIGURE – ABB. – FIG. FIGURE-FIG.-IMAGE-ABB.-CIFRAS-AFBEELDINGEN 118
VIII. TAB1 - DATI TECNICI - TECHNICAL DATA - TECHNISCHE DATEN - CARACTERISTIQUES TECHNIQUES - DATOS TECNICOS - TECHNISCHE GEGEVENS UGELLI E REGOLAZIONI - NOZZLES AND SETTINGS - BUSES ET LES PARAMÈTRES - DUSEN UND EINSTELLUNGEN - BOQUILLAS Y LOS AJUSTES - VERSTUIVERS EN REGELINGEN 119
IX. TAB2 - DATI TECNICI - TECHNICAL DATA - TECHNISCHE DATEN - CARACTERISTIQUES TECHNIQUES - DATOS TECNICOS - TECHNISCHE GEGEVENS CATEGORIE E PRESSIONI - CATEGORIES AND PRESSURES - CATÉGORIES ET PRESSIONS - KATEGORIEN E DRUCK - LAS CATEGORÍAS Y LAS PRESIONES - CATEGORIEËN EN DRUK 120
X. TAB3 - DATI TECNICI - TECHNICAL DATA - TECHNISCHE DATEN - CARACTERISTIQUES TECHNIQUES - DATOS TECNICOS - TECHNISCHE GEGEVENS DATI TECNICI APPARECCHIATURE GAS - TECHNICAL DATA OF GAS APPLIANCES - CARACTÉRISTIQUES TECHNIQUES DES APPAREILS À GAZ - TECHNISCHE DATEN GASGERATE - DATOS TÉCNICOS DE LOS EQUIPOS DE GAS - TECHNISCHE GEGEVENS GASAPPARATUUR 121
XI. TAB4 - DATI TECNICI - TECHNICAL DATA - TECHNISCHE DATEN - CARACTERISTIQUES TECHNIQUES - DATOS TECNICOS- TECHNISCHE GEGEVENS DATI TECNICI APPARECCHIATURE ELETTRICHE - DATI TECNICI ATECHNICAL DATA OF ELECTRIC APPLIANCES - CARACTÈRISTIQUES TECHNIQUES DES APPAREILS ELECTRIQUES - TECHNISCHE DATEN ELEKTROGERATE - DATOS TÉCNICOS DE LOS EQUIPOS ELÉCTRICOS - TECHNISCHE GEGEVENS ELEKTRISCHE APPARATUUR 123

UK - INSTALLATION – USE - MAINTENANCE

I. GENERAL PRESCRIPTIONS

READ THIS MANUAL CAREFULLY. IT PROVIDES IMPORTANT INFORMATION FOR SAFE INSTALLATION, USE AND MAINTENANCE OF THE APPLIANCE.

FAILURE TO COMPLY WITH WHAT IS PRESENTED BELOW MAY COMPROMISE THE SAFETY OF THE EQUIPMENT.

THE MANUFACTURER WILL NOT BE LIABLE FOR ANY DAMAGE OR INJURY RESULTING FROM FAILURE TO OBSERVING THE FOLLOWING RULES.

TRANSLATION OF THE ORIGINAL INSTRUCTIONS.

APPLIANCES NEED PRECAUTIONS FOR INSTALLATION, PLACING AND/OR FIXATION AND CONNECTION TO THE MAINS. SEE SECTION "INSTALLATION INSTRUCTIONS".

THE APPLIANCES NEED PRECAUTIONS FOR CLEANING. SEE THE SECTION " INSTRUCTION FOR CLEANING".

THE SYMBOL " HIGH VOLTAGE" IS PLACED ON A PANEL THAT GIVES ACCESS TO A PART WITH HIGH VOLTAGE.

Keep this manual in a safe place, known to all users, so that it can be consulted throughout the working life of the appliance.

This equipment is designed for cooking food. It is intended for industrial use. Any other use is to be considered improper

This appliance is not intended for use by people (including children) with limited physical, sensory or mental abilities or without experience and knowledge of it.

Unless they are supervised or instructed in its use by a person responsible for their safety.

Do not leave de appliance unattended in presence of children and ensure that the latter do not have acces to the appliance.

The appliance must be used by trained personnel. Do not leave the appliance unattended when operating.

DO NOT STORE " AMMABLE MATERIALS IN CLOSE PROXIMITY TO THE APPLIANCE. FIRE HAZARD.

The appliance must be installed in a well-ventilated room.

Inadequate ventilation causes asphyxia. Do not obstruct the ventilation system of the place where the

appliance is installed. Do not obstruct the vents or ducts of this or other appliances.

In the event of an appliance fault or malfunction, shut the gas shut-off valve and/or switch the appliance off at the main switch installed upline.

Installation and conversion to a different type of gas must be carried out by qualified technicians authorized by the manufacturer, in compliance with current safety standards and the instructions in this manual.

Appliance maintenance and conversion to a different type of gas must be carried out by qualified technicians authorized by the manufacturer, in compliance with current safety standards and the instructions in this manual.

Clean the appliance following the instructions given in Chapter " INSTRUCTIONS FOR CLEANING".

1. DISPOSAL OF PACKING AND OF THE APPLIANCE

PACKING

The packing is made using environmentally friendly materials. The plastic recyclable components are:

- the transparent cover, the bags containing the instructions manual and nozzles (made of Polyethylene - PE).
- the straps (in Polypropylene - PP).

APPLIANCE

The appliance is manufactured 90% from recyclable metals (stainless steel, aluminium sheet, copper.. ..).

The appliance must be scrapped in compliance with current regulations governing such disposal.

Make the appliance unusable before scrapping.

It must be disposed of properly.

THE SYMBOL SHOWING A CROSSED-OUT WASTE CONTAINER ON THE UNIT OR PACKAGE INDICATES THAT, AT THE END OF ITS LIFE CYCLE, THE PRODUCT MUST BE COLLECTED SEPARATE FROM OTHER WASTE.

THE DIFFERENTIATED COLLECTION OF THIS EQUIPMENT IS ORGANISED AND MANAGED BY THE PRODUCER.

THE USER WHO INTENDS TO GET RID OF THIS EQUIPMENT SHALL CONTACT THE PRODUCER AND FOLLOW THE SYSTEM THAT THE LATTER HAS USED IN ORDER TO COLLECT THE EQUIPMENT SEPARATELY AT THE END OF ITS LIFE.

PROPER SEPARATE COLLECTION HELPS PREVENT POSSIBLE NEGATIVE IMPACTS ON THE ENVIRONMENT AND HEALTH, AND FAVOURS THE REUSE AND/OR RECYCLING OF THE UNIT'S MATERIALS.

ABUSIVE DISPOSAL OF THE PRODUCT BY THE HOLDER WILL RESULT IN THE APPLICATION OF PENALTIES AS PER CURRENT STANDARDS.

2. SAFETY DEVICES

ELECTRIC OVEN

SAFETY THERMOSTAT

THE MANUFACTURER WILL NOT BE LIABLE FOR ANY DAMAGE OR INJURY RESULTING FROM FAILURE TO OBSERVING THE FOLLOWING RULES.

The appliance is equipped with a manual reset safety thermostat that interrupts heating when the operating temperature exceeds the maximum permitted value.

To restore appliance operation, remove the control panel and press the thermostat reset button. This procedure must only be carried out by a qualified, authorized technician.

II. INSTRUCTIONS FOR INSTALLATION

3. REMINDERS FOR THE INSTALLER

READ THIS MANUAL CAREFULLY. IT PROVIDES IMPORTANT INFORMATION FOR SAFE INSTALLATION, USE AND MAINTENANCE OF THE APPLIANCE.

FAILURE TO COMPLY WITH WHAT IS PRESENTED BELOW MAY COMPROMISE THE SAFETY OF THE EQUIPMENT.

THE MANUFACTURER WILL NOT BE LIABLE FOR ANY DAMAGE OR INJURY RESULTING FROM FAILURE TO OBSERVING THE FOLLOWING RULES.

Identify the specific appliance model. The model number is detailed on the packing and on the appliance dataplate.

The appliance must be installed in a well-ventilated room.

Installation and conversion to a different type of gas must be carried out by qualified technicians authorized by the manufacturer, in compliance with current safety standards and the instructions in this manual.

Appliance maintenance and conversion to a different type of gas must be carried out by qualified technicians authorized by the manufacturer, in compliance with current safety standards and the instructions in this manual.

Do not obstruct any air vents or drains present on the appliance.

Do not tamper with appliance components.

4. REFERENCE STANDARDS AND LAWS

Install the appliance in accordance with the safety standards in force in the country.

5. UNPACKING

Check the state of the packing and in the event of damage, ask the delivery person to inspect the goods.
Remove the packing.
Remove the protective film from the outer panels. Use a suitable solvent to remove any residual adhesive from the panels.

6. POSITIONING

The overall dimensions of the appliance and the position of connections are given on the installation diagram at the end of this manual.

The appliance can be installed singly or in combination with other appliances in the same product range.
The appliance is not suitable for integrated installation.
Position the appliance at least 10 cm from adjacent walls.
If the appliance is to be be placed near walls, dividers, kitchen furniture, decorative elements etc. this must be made of non-combustible materials

Otherwise, they must be covered with suitable non-combustible heat insulating materials.

Level the appliance by means of the height-adjustable feet

APPLIANCE ASSEMBLY WITH BASE AND BRIDGE

Follow the instructions provided with the type of support utilized.

FUMES EXHAUST SYSTEM

Create a fumes exhaust system based on the " Type " of appliance. The " Type " is stated on the appliance dataplate.

" A1 " TYPE APPLIANCE

Position the “A1” type appliance below an extractor hood to ensure smoke and fumes generated by cooking are removed.

" B21 " TYPE APPLIANCE

Position the “B21” type appliance below an extractor hood.

" B11 " TYPE APPLIANCE

Fit the “B11” type appliance with a suitable fl ue, available from the appliance manufacturer. Follow the assembly instructions provided with the flue.

Connect the flue to a 150/155 mm diameter hose, heat resistant to 300°C.

Vent to the outside or into an effi cient fl ue. The hose length must not exceed 3 metres.

7. CONNECTIONS

The position and dimensions of connections are given in the installation diagram at the end of this manual.

CONNECTION TO THE GAS SUPPLY

Check that the appliance is designed to operate with the type of gas supply present on site. Check the information given on the decals on the packing and appliance.
Convert the appliance to the local gas type, if necessary. Follow the instructions at the next paragraph “Conversion to a different type of gas”.
On top appliances a rear connection is also available. Remove the plug present and screw it tightly onto the front connector.
A rapid-action gas shut-off valve must be fitted upstream of the appliance in an easily accessible position.

Do not use connection pipes having a diameter smaller than that of the appliance's gas connector.

Once the appliance has been installed, check for gas leaks at the connection points.

ELECTRICAL CONNECTIONS

Check if the appliance is designed to operate at the voltage and frequency of the power supply present on site. Check the details given on the appliance dataplate and plaque near the terminal board.

Install upstream of the equipment in an easily accessible place, an all-pole disconnecting device with a contact gap of allowing full disconnection under the conditions of overvoltage category III.

A flexible rubber cable with insulation specifications not lower than type H05 RN-F must be used for connection.

Connect the power supply cable to the terminal board as shown in the wiring diagram supplied with the appliance.
Secure the power supply cable with the cable clamp.
Protect the power supply cable on the outside of the appliance with a rigid plastic or metal pipe.
If the power supply cable is damaged, it must be replaced by the manufacturer or his service centre or by a person with similar qualifications to prevent any risk.

THE SYMBOL " HIGH VOLTAGE" IS PLACED ON A PANEL THAT GIVES ACCESS TO A PART WITH HIGH VOLTAGE.

PROTECTIVE EARTH AND EARTH BONDING CONNECTIONS

Connect the appliance to an efficient ground circuit. Connect the earth conductor to the terminal with the symbol ⏚ next to the main terminal board.
Connect the metal structure of the appliance to the equipotential node. Connect the conductor to the terminal with the symbol on the outside part of the bottom.

CONNECTION TO THE WATER SUPPLY

The appliance must be connected to a potable water supply. The water inlet pressure must be between 150 kPa and 300 kPa. Use a pressure reducer if the inlet pressure is above the maximum permitted level.
Install a mechanical filter and a shut-off valve upstream of the appliance in an easily accessible point.
Make sure the water circuit is free of ferrous particles before connecting the filter and the appliance.
Seal any unused connectors with a plug.
Once the appliance has been installed, check for gas leaks at the connection points.

CONNECTION TO THE WATER DRAIN

The water drainage system must be made using materials resistant to temperatures of 100 °C. The bottom of the appliance must not be subjected to steam produced by drainage of hot water.
Install a siphoned floor drain with grating below the water drain cock of Boiling pans and in front of Bratt pans.

8. CONVERSION TO ANOTHER TYPE OF GAS

Table Tab1 specifies:

- which gas can be used for the appliance.
- the nozzles and settings for each gas that can be used.

  For nozzles, the number indicated in table TAB1 is also stamped on the body of nozzles.

To convert the appliance to the local gas type, follow the instructions given in TAB1 andcarry out the steps below:

- Replace the main burner nozzle (UM).
- Adjust the main burner's air regulator to distance A.
- Replace the pilot burner nozzle (UP).
- Adjust the pilot burner air " ow (if necessary).
- Replace the gas valve minimum nozzle (Um).
- Affix the adhesive tab indicating the new type of gas used.
- The nozzles and adhesive tabs are supplied with the appliance.

GAS HOB

REPLACING THE MAIN BURNER NOZZLE

Remove the control panel.
Remove pan stand grids, basins and burners.
Remove nozzle UM and replace it with the one indicated in table TAB1.
Retighten nozzle UM.
Reassemble all parts. For assembly, proceed in reverse order.

REPLACING THE MINIMUM ADJUSTMENT SCREW

Remove the control panel.
Remove nozzle UM and replace it with the one indicated in table TAB1.
Retighten nozzle UM.
Reassemble all parts. For assembly, proceed in reverse order.

GAS SOLID TOP RANGES

REPLACING THE NOZZLE AND THE MAIN BURNER PRIMARY AIR REGULATION

Remove the control panel.
Remove nozzle UM and replace it with the one indicated in table TAB1.
Retighten nozzle UM.

Slacken screw V and position the air regulator at distance A as indicated in table TAB1.

Retighten screw V fully.

Reassemble all parts. For assembly, proceed in reverse order.

REPLACING THE MINIMUM ADJUSTMENT SCREW

Remove the control panel.
Remove nozzle UM and replace it with the one indicated in table TAB1.
Retighten nozzle UM.

Reassemble all parts. For assembly, proceed in reverse order.

REPLACING THE PILOT BURNER NOZZLE

Remove the control panel and internal guards.

Undo connector R.
Remove nozzle UP and replace it with the one indicated in table TAB1.
Retighten connector R. Reassemble all parts.
Following, in reverse order, the sequence used for their removal.

GAS OVEN

REPLACING THE NOZZLE AND THE MAIN BURNER PRIMARY AIR REGULATION

Open the oven door.

remove the sole and the protection panel

Slacken screw V.

remove the UM nozzle.

Retighten nozzle UM.

Place the aeration adjuster at the distance A specified in the table TAB1.

Retighten screw V fully.

Reassemble all parts. For assembly, proceed in reverse order.

REPLACING THE MINIMUM ADJUSTMENT SCREW

Remove the control panel.
Remove nozzle UM and replace it with the one indicated in table TAB1.
Retighten nozzle UM.

Reassemble all parts. For assembly, proceed in reverse order.

GAS STOCKPOT STOVE

REPLACING THE NOZZLE AND THE MAIN BURNER PRIMARY AIR REGULATION

Remove the control panel.
Remove nozzle UM and replace it with the one indicated in table TAB1.
Retighten nozzle UM.

Slacken screw V and position the air regulator at distance A as indicated in table TAB1.

Retighten screw V fully.

Reassemble all parts. For assembly, proceed in reverse order.

REPLACING THE MINIMUM ADJUSTMENT SCREW

Remove the control panel.
Remove nozzle UM and replace it with the one indicated in table TAB1.
Retighten nozzle UM.

Reassemble all parts. For assembly, proceed in reverse order.

REPLACING THE PILOT BURNER NOZZLE

Remove the control panel.

Undo connector R.
Remove nozzle UP and replace it with the one indicated in table TAB1.
Retighten connector R. Reassemble all parts.
Following, in reverse order, the sequence used for their removal.

9. COMMISSIONING

Following installation, conversion to a different type of gas or any maintenance operations, check appliance operation. In the event of any malfunction, consult the next Paragraph " Troubleshooting " .

GAS APPLIANCES

Switch on the appliance as directed in the instructions and reminders for use given in

Chapter " INSTRUCTIONS FOR USE " and check:

- the gas supply pressure (see next Paragraph).
- the correct ignition of the burners and the effectiveness of the fumes removal system.

CHECKING THE GAS SUPPLY PRESSURE

To measure the gas supply pressure use a manometer with a minimum definition of 0,1 mbar.

Remove the control panel.

Remove the screw from on pressure test point PP and connect the manometer to the test point.

Make the measurement with the appliance in operation.

IMPORTANT! IF THE GAS SUPPLY PRESSURE IS NOT WITHIN THE LIMITS (MIN. - MAX) INDICATED IN TABLE TAB2, CEASE OPERATION OF THE APPLIANCE AND CONTACT THE GAS UTILITY COMPANY.

Disconnect the manometer and retighten the retaining screw on the pressure connection.

ELECTRIC EQUIPMENT

Switch on the appliance as directed in the instructions and reminders for use given in Chapter " INSTRUCTIONS FOR USE " and check:

- the current values of each phase.
- the correct operation of the heating elements.

III. INSTRUCTIONS FOR USE

10. REMINDERS FOR THE USER

READ THIS MANUAL CAREFULLY. IT PROVIDES IMPORTANT INFORMATION FOR SAFE INSTALLATION, USE AND MAINTENANCE OF THE APPLIANCE. THE MANUFACTURER WILL NOT BE LIABLE FOR ANY DAMAGE OR INJURY RESULTING FROM FAILURE TO OBSERVING THE FOLLOWING RULES.

For after-sales service, contact technical assistance centres authorized by the manufacturer and demand the use of original spare parts.

Have the appliance serviced at least twice a year. The manufacturer recommends taking out a service contract.

The appliance is designed for professional use and must be operated by trained personnel.

The appliance is to be used for cooking food as specified in the prescriptions for use. Any other use is considered to be improper.

Do not allow the appliance to operate empty for prolonged periods. Only pre-heat the oven just before use.

Do not leave the appliance unattended while in operation.

In the event of an appliance fault or malfunction, shut the gas shut-off valve and/or switch the appliance off at the main switch installed upline.

Clean the appliance following the instructions given in Chapter " INSTRUCTIONS FOR CLEANING".

DO NOT STORE " AMMABLE MATERIALS IN CLOSE PROXIMITY TO THE APPLIANCE. FIRE HAZARD.

Do not obstruct any air vents or drains present on the appliance.

Do not tamper with appliance components.

Keep this manual in a safe place, known to all users, so that it can be consulted throughout the working life of the appliance.

Installation and appliance maintenance must be carried out by qualified technicians authorized by the manufacturer, in compliance with current safety standards and the instructions in this manual.

Appliance maintenance and conversion to a different type of gas must be carried out by qualified technicians authorized by the manufacturer, in compliance with current safety standards and the instructions in this manual.

11. USING THE GAS HOB

The appliance is designed for cooking foods contained in pots and pans.

Check that the flame spreaders are correctly placed on the burners.

BURNER IGNITION AND EXTINCTION

The gas tap control knob has the following positions:

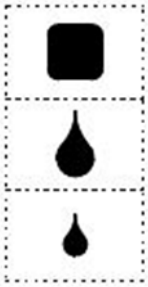

OFF

MAX. FLAME

MIN. FLAME

MAIN BURNER IGNITION

To switch on the pilot burner rotate the knob from the “off” position to the “maximum flame” position

For the minimum flame, turn the knob from “max. flame” to “min. flame”.

TURNING OFF

to switch off the main burner turn the knob to the "off" position.

12. USING THE GAS HOB

The appliance is designed for cooking foods contained in pots and pans.

The highest temperatures are in the centre of the hotplate.

Check that the flame spreader is correctly placed on the burner. Raise the central disc on the hotplate.

BURNER IGNITION AND EXTINCTION

The gas tap control knob has the following positions:

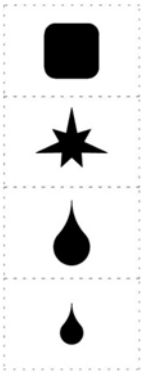

OFF

PILOT IGNITION

MAX. FLAME

MIN. FLAME

PILOT IGNITION

Press and turn knob to “pilot on”.

Press the knob down fully and light the pilot using the piezoelectric igniter.

Hold the knob down for about 20 seconds before releasing it. If the pilot flame goes out, repeat the operation.

The pilot flame can be seen through the peep hole on the control panel.

The pilot light can be lit by bringing an open flame up to the nozzle. Raise the central disc on the hotplate.

MAIN BURNER IGNITION

To light the main burner, turn the knob from “pilot on” to “max. flame”.

For the minimum flame, turn the knob from “max. flame” to “min. flame”.

TURNING OFF

Turn the knob from “max. flame” or “min. flame” to “pilot on”.

To shut off the pilot, press the knob lightly and turn it to “off”.

13. USING THE HOTPLATE/SIMPLE SERVICE

The appliance is designed for cooking foods contained in pots and pans.

The highest temperatures are in the centre of the hotplate.

Check that the flame spreader is correctly placed on the burner. Raise the central disc on the hotplate.

BURNER IGNITION AND EXTINCTION

The gas tap control knob has the following positions:

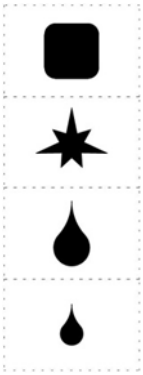

OFF

PILOT IGNITION

MAX. FLAME

MIN. FLAME

PILOT IGNITION

Press and turn knob to “pilot on”.

Press the knob down fully and light the pilot using the piezoelectric igniter.

Hold the knob down for about 20 seconds before releasing it. If the pilot flame goes out, repeat the operation.

The pilot flame can be seen through the peep hole on the control panel.

The pilot light can be lit by bringing an open flame up to the nozzle. Raise the central disc on the hotplate.

MAIN BURNER IGNITION

To light the main burner, turn the knob from “pilot on” to “max. flame”.

For the minimum flame, turn the knob from “max. flame” to “min. flame”.

TURNING OFF

Turn the knob from “max. flame” or “min. flame” to “pilot on”.

To shut off the pilot, press the knob lightly and turn it to “off”.

14. GAS OVEN 600 SERIES USE

The appliance is designed for cooking foods placed on the grilles provided.

Do not leave the door even partially open during use.

ATTENTION: WHEN THE OVEN GAS MODE IS ON THE GRILL DOESN’T WORK

BURNER IGNITION AND EXTINCTION

The thermostat control knob has the following positions:

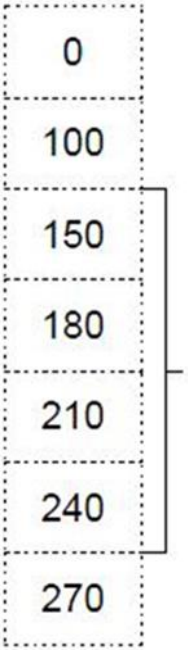

OFF

MINIMUM TEMPERATURE

INTERMEDIATE TEMPERATURES

MAXIMUM WATER TEMPERATURE

MAIN BURNER IGNITION

Turn the knob to the chosen temperature setting for cooking.

Press the knob for 5-10 seconds. The burner is turned on electrically.

If the burner doesn’t turn on, open the oven door for 1 minute and repeat the operation.

TURNING OFF

to switch off the main burner turn the knob to the "off" position.

ELECTRIC GRILL SWITCH ON/OFF

The energy regulator control knob has the following positions:

OFF

MINIMUM TEMPERATURE

INTERMEDIATE TEMPERATURES

MAXIMUM WATER TEMPERATURE

ELECTRIC GRILL SWITCH ON

Turn the energy regulator knob to any position between “MIN” and “MAX”.

The yellow and the internal oven indicator lamps turn on.

TURNING OFF

Turn the energy regulator knob to position " Off " .

15. GAS OVEN 650 SERIES USE

The appliance is designed for cooking foods placed on the grilles provided.

Do not leave the door even partially open during use.

BURNER IGNITION AND EXTINCTION

the control knob of the thermostatic tap has the following positions use:

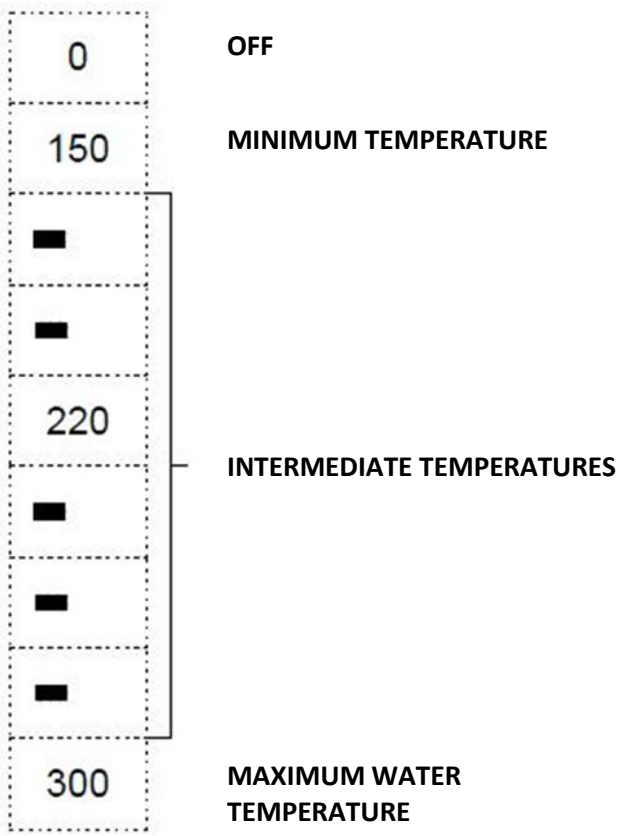

MAIN BURNER IGNITION

Turn the knob to the chosen temperature setting for cooking.

Press the knob down simultaneously with the piezoelectric unit . Press the knob down for 10-15 seconds and then leave it; the pilot burner will remain on.

If it turns off, repeat the operation.

TURNING OFF

to switch off the main burner turn the knob to the "off" position.

16. GAS STOCKPOT STOVE USE

The appliance is designed for cooking foods contained in pots and pans.

Check that the flame spreaders are correctly placed on the burners.

BURNER IGNITION AND EXTINCTION

The gas tap control knob has the following positions:

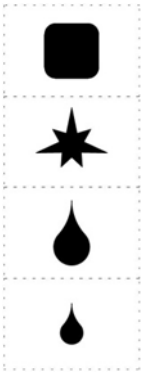

PILOT IGNITION

Press and turn knob to “pilot on”.

Press the knob down fully and light the pilot with a flame.

Hold the knob down for about 20 seconds before releasing it. If the pilot flame goes out, repeat the operation.

MAIN BURNER IGNITION

To light the main burner, turn the knob from “pilot on” to “max. flame”.

For the minimum flame, turn the knob from “max. flame” to “min. flame”.

TURNING OFF

Turn the knob from “max. flame” or “min. flame” to “pilot on”.

To shut off the pilot, press the knob lightly and turn it to “off”.

17. ELECTRIC COOK TOP/ELECTRIC STOCKPOT STOVE USE

The appliance is designed for cooking foods contained in pots and pans.

Use flat bottomed pans.

Do not leave the hotplates switched on with no pan or an empty pan in place.

Do not pour cold liquids onto the hot hotplate.

SWITCHING ON AND OFF

The control knob has the following positions:

0	**OFF**
1	**MINIMUM TEMPERATURE**
2	**INTERMEDIATE TEMPERATURES**
3	
4	
5	
6	**MAXIMUM WATER TEMPERATURE**

SWITCHING ON

Turn the control knob to the chosen position.
The green indicator light switches on.
Lighting up of green indicator “A” signals that the corresponding hot-plate is on.

TURNING OFF

Turn the knob to position " 0 " .
The green indicator light switches off.

18. ELECTRIC CONVECTION OVEN USE

The appliance is designed for cooking foods placed on the grilles provided.
Do not leave the door even partially open during use.
The appliance is equipped with a manual reset safety thermostat that interrupts heating when the operating temperature exceeds the maximum permitted value.

SWITCHING ON AND OFF

The thermostat control knob has the following positions:

0	**OFF**
50	**MINIMUM TEMPERATURE**
100	**INTERMEDIATE TEMPERATURES**
150	
200	
250	
300	**MAXIMUM WATER TEMPERATURE**

SWITCHING ON

Turn the thermostat knob to the chosen temperature setting for cooking.
the yellow and the green indicator lamp turn on.
The yellow indicator light switches off when the oven reaches the set temperature.
the green lamp indicate that the appliance is under voltage

TURNING OFF

Turn the thermostat knob to position " 0 " .
the yellow and the green indicator lamp turn off.

19. ELECTRIC MULTIFUNCTION OVEN (600 SERIES) USE

The appliance is designed for cooking foods placed on the grilles provided.
Do not leave the door even partially open during use.
The appliance is equipped with a manual reset safety thermostat that interrupts heating when the operating temperature exceeds the maximum permitted value.

SWITCHING ON AND OFF

The electric oven is controlled by two knobs (for selecting the type of heating and the cooking temperature). A yellow indicator light indicates operation of the heating elements.
The control knob has the following positions:

0	**OFF**
	OVEN LAMP
	UPPER AND LOWER HEATING ELEMENTS
	UPPER AND INNER HEATING ELEMENTS WITH FAN
	GRILL HEATING ELEMENT
	GRILL HEATING ELEMENT WITH FAN

The thermostat control knob has the following positions:

0	**OFF**
50	**MINIMUM TEMPERATURE**
100	**INTERMEDIATE TEMPERATURES**
150	
200	
250	
MAX	**MAXIMUM WATER TEMPERATURE**

SWITCHING ON

Turn the control knob to the chosen position.

Turn the thermostat knob to the chosen temperature setting for cooking.

the yellow and the green indicator lamp turn on.

The yellow indicator light switches off when the oven reaches the set temperature.

the green lamp indicate that the appliance is under voltage

TURNING OFF

Turn the thermostat knob to position " 0 " .

Turn the knob to position " 0 " .

20. PROLONGED DISUSE

Before any prolonged disuse of the appliance, proceed as follows:

- Clean the appliance thoroughly.
- Rub stainless steel surfaces with a cloth soaked in vaseline oil to create a protective film.
- Leave pot lids open.
- Close cocks or main switches ahead of the appliances.

Following prolonged disuse, proceed as follows:

- Inspect the appliance thoroughly before using it again.
- Allow electric appliances to operate at the lowest temperature for at least 60 minutes.

IV. INSTRUCTIONS FOR CLEANING

21. REMINDERS FOR CLEANING

READ THIS MANUAL CAREFULLY. IT PROVIDES IMPORTANT INFORMATION FOR SAFE INSTALLATION, USE AND MAINTENANCE OF THE APPLIANCE. THE MANUFACTURER WILL NOT BE LIABLE FOR ANY DAMAGE OR INJURY RESULTING FROM FAILURE TO OBSERVING THE FOLLOWING RULES. DISCONNECT THE APPLIANCE ELECTRIC SUPPLY, IF PRESENT, BEFORE CARRYING OUT ANY OPERATION.

Clean the satin finish stainless steel exterior surfaces, the cooking wells and the surface of the hotplates every day.

At least twice a year, have an authorized technician clean the internal parts of the appliance.

Do not use corrosive products to clean the floor beneath the appliance.

Do not use direct or high pressure water jets to clean the appliance.

SATIN FINISH STAINLESS STEEL SURFACES

Clean the surfaces with a cloth or sponge using water and proprietary non-abrasive detergents. Follow the direction of the satin finish lines. Rinse

repeatedly and dry thoroughly.

Do not use pan scourers or other iron items.
Do not use chemical products containing chlorine.
Do not use sharp objects which might scratch and damage the surfaces.

ELECTRIC HOTPLATES

Clean surfaces with a damp cloth.
Switch on for a few minutes to dry rapidly.
Lubricate surfaces with a fine coat of food grade oil.

HOTPLATE RANGE

Clean surfaces with a damp cloth.
Switch on for a few minutes to dry rapidly.
Lubricate surfaces with a fine coat of food grade oil.

v. INSTRUCTIONS FOR MAINTENANCE

22. REMINDERS FOR THE MAINTENANCE TECHNICIAN

THE MANUFACTURER WILL NOT BE LIABLE FOR ANY DAMAGE OR INJURY RESULTING FROM FAILURE TO OBSERVING THE FOLLOWING RULES.

Identify the specific appliance model. The model number is detailed on the packing and on the appliance dataplate.
The appliance must be installed in a well-ventilated room.
Do not obstruct any air vents or drains present on the appliance.
Do not tamper with appliance components.
Appliance maintenance and conversion to a different type of gas must be carried out by qualified technicians authorized by the manufacturer, in compliance with current safety standards and the instructions in this manual.

23. CONVERSION TO ANOTHER TYPE OF GAS

See Chapter “ Instructions for installation “.

24. COMMISSIONING

See Chapter “ Instructions for installation “.

25. TROUBLESHOOTING

GAS HOB

THE MAIN BURNER DOESN’T TURN ON

Possible causes:
- Insufficient gas supply pressure.
- Blocked tubing or nozzle.
- Defective gas tap or valve.
- Defective burner (gas outlet holes clogged).

GAS SOLID TOP RANGES

THE PILOT BURNER DOES NOT LIGHT.

Possible causes:
- Insufficient gas supply pressure.
- Blocked tubing or nozzle.
- Defective gas tap or valve.
- Igniter defective or not properly connected.
- Igniter or igniter wire defective.

PILOT BURNER GOES OUT DURING USE.

Possible causes:
- Insufficient gas supply pressure.
- Defective gas tap or valve.
- Defective thermocouple or insufficient heating.
- Thermocouple incorrectly connected to gas tap or valve.
- Knob of gas tap or valve not pressedsufficiently.

THE MAIN BURNER DOES NOT LIGHT (EVEN THOUGH PILOT IS LIT).

Possible causes:
- Insufficient gas supply pressure.
- Blocked tubing or nozzle.
- Defective gas tap or valve.
- Defective burner (gas outlet holes clogged).

GAS OVEN

THE MAIN BURNER DOESN'T TURN ON

Possible causes:
- Insufficient gas supply pressure.
- Blocked tubing or nozzle.
- Defective gas tap or valve.
- Defective burner (gas outlet holes clogged).

HEATING CANNOT BE ADJUSTED.

Possible causes:
- Defective gas tap

GAS STOCKPOT STOVE

THE PILOT BURNER DOES NOT LIGHT.

Possible causes:
- Insufficient gas supply pressure.
- Blocked tubing or nozzle.
- Defective gas tap or valve.
- Igniter defective or not properly connected.
- Igniter or igniter wire defective.

PILOT BURNER GOES OUT DURING USE.

Possible causes:
- Insufficient gas supply pressure.
- Defective gas tap or valve.
- Defective thermocouple or insufficient heating.
- Thermocouple incorrectly connected to gas tap or valve.
- Knob of gas tap or valve not pressedsufficiently.

THE MAIN BURNER DOES NOT LIGHT (EVEN THOUGH PILOT IS LIT).

Possible causes:
- Insufficient gas supply pressure.
- Blocked tubing or nozzle.
- Defective gas tap or valve.
- Defective burner (gas outlet holes clogged).

ELECTRIC COOK TOP/ELECTRIC STOCKPOT STOVE

THE HOTPLATE DOES NOT HEAT.

Possible causes:
- Hotplate defective.

ELECTRIC OVEN

THE APPLIANCE DOES NOT HEAT.

Possible causes:
- Temperature thermostat defective.
- Heating elements defective.
- Safety thermostat tripped.

HEATING CANNOT BE ADJUSTED.

Possible causes:
- Temperature thermostat defective.

26. REPLACING COMPONENTS

REMINDERS FOR REPLACING COMPONENTS

SHUT THE GAS SHUT-OFF VALVE AND/OR SWITCH THE APPLIANCE OFF AT THE MAIN SWITCH INSTALLED UPSTREAM.

AFTER REPLACING A GAS SYSTEM COMPONENT, CHECK FOR GAS LEAKS AT CONNECTION POINTS.

DISCONNECT THE APPLIANCE ELECTRIC SUPPLY, IF PRESENT, BEFORE CARRYING OUT ANY OPERATION.

AFTER REPLACING AN ELECTRICAL SYSTEM COMPONENT, CHECK IT IS CORRECTLY WIRED.

GAS HOB

REPLACING THE GAS TAP.

- Remove the control panel.
- Remove and replace the component.
- Reassemble all parts. For assembly, proceed in reverse order.

GAS SOLID TOP RANGES

REPLACING THE GAS TAP AND PIEZO IGNITER.

- Remove the control panel.

- Remove and replace the component.
- Reassemble all parts. For assembly, proceed in reverse order.

REPLACING THE MAIN BURNER, PILOT BURNER, THERMOCOUPLE AND IGNITER.

- Remove the hotplate.
- Remove the control panel and internal guards.
- Remove and replace the component.
- Reassemble all parts. For assembly, proceed in reverse order.

GAS OVEN

THERMOSTATIC TAP AND PIEZOELECTRIC UNIT REPLACEMENT

- Remove the control panel.
- Remove the bulb from its seat on the side of the oven.
- Remove and replace the component.
- Reassemble all parts. For assembly, proceed in reverse order.

REPLACING THE BURNER

- Open the oven door.
- Remove the floor and the plate positioned on top of the burner.
- Remove and replace the component.
- Reassemble all parts. For assembly, proceed in reverse order.

REPLACING THE THERMOCOUPLE

- Remove the control panel.
- Open the oven door.
- Remove the floor and the plate positioned on top of the burner.
- Remove and replace the component.
- Reassemble all parts. For assembly, proceed in reverse order.

GAS STOCKPOT STOVE

REPLACING THE GAS TAP.

- Remove the control panel.
- Remove and replace the component.
- Reassemble all parts. For assembly, proceed in reverse order.

REPLACING THE MAIN BURNER, PILOT BURNER, THERMOCOUPLE AND IGNITER.

- Remove the control panel.
- Remove and replace the component.
- Reassemble all parts. For assembly, proceed in reverse order.

ELECTRIC COOK TOP/ELECTRIC STOCKPOT STOVE

REPLACING THE KNOB AND INDICATOR LIGHT

- Remove the control panel.
- Remove and replace the component.
- Reassemble all parts. For assembly, proceed in reverse order.

REPLACING THE HOTPLATE.

- Remove the control panel and internal guards.
- Remove and replace the component. Screw spacer M8 taken from the old part onto the new one.
- Reassemble all parts. For assembly, proceed in reverse order.

ELECTRIC OVEN

REPLACING THE KNOB AND INDICATOR LIGHT

- Remove the control panel.
- Remove and replace the component.
- Reassemble all parts. For assembly, proceed in reverse order.

REPLACING THE WORKING THERMOSTAT AND SAFETY THERMOSTAT

- Remove the control panel.
- Remove the bulb from its seat on the side of the oven.
- Remove and replace the component.
- Reassemble all parts. For assembly, proceed in reverse order.

REPLACING THE HEATING ELEMENT

- Remove the oven floor (only for lower heating elements).

- Undo the screw securing the element to the oven and pull the element out by approx. 10 cm.
- Reassemble all parts. For assembly, proceed in reverse order.

27. CLEANING THE INTERIOR

Check the condition of the inside of the appliance.
Remove any built-up dirt.
Check and clean the fumes exhaust system.

28. MAIN COMPONENTS

GAS HOB

- Gas Cock
- Main Burner
- Pilot burner
- Thermocouple

GAS SOLID TOP RANGES

- Gas Cock
- Main Burner
- Pilot burner
- Thermocouple
- Igniter
- Piezoelectric ignition

GAS OVEN

- Gas Cock
- Main Burner
- Pilot burner
- Thermocouple
- Igniter
- Piezoelectric ignition

GAS STOCKPOT STOVE

Gas Cock
Main Burner
Pilot burner
Thermocouple
Igniter

ELECTRIC HOB

- Control knob
- Hotplate
- Indicator light

ELECTRIC OVEN

- Control knob
- Working thermostat
- Safety thermostat
- Heating element
- Indicator light

VI. SCHEMI DI INSTALLAZIONE – INSTALLATIONS PLAN - INSTALLATION DIAGRAM – SCHEMA D'INSTALLATION – ESQUEMA DE INSTALACION - INSTALLATIESCHEMA'S

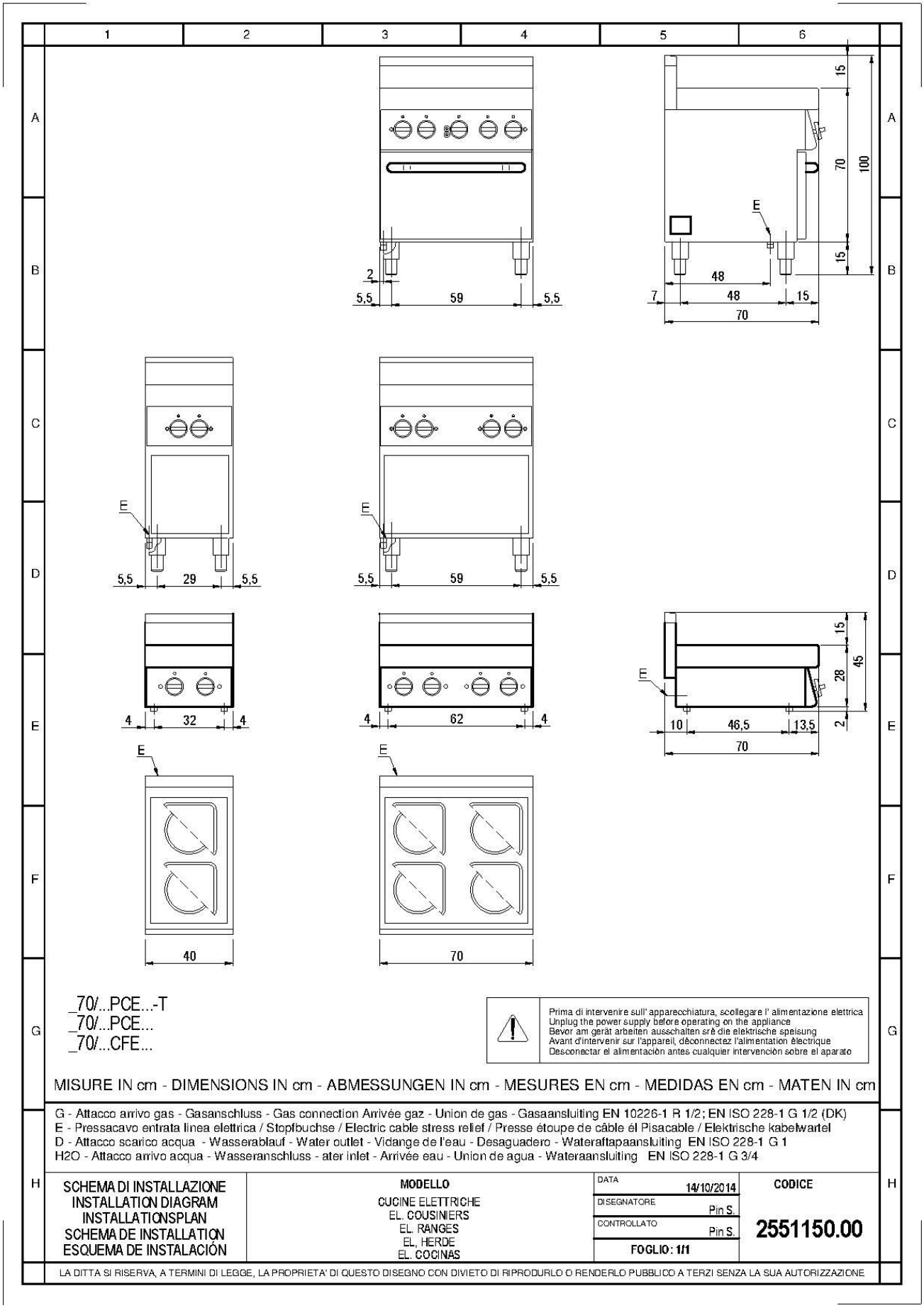

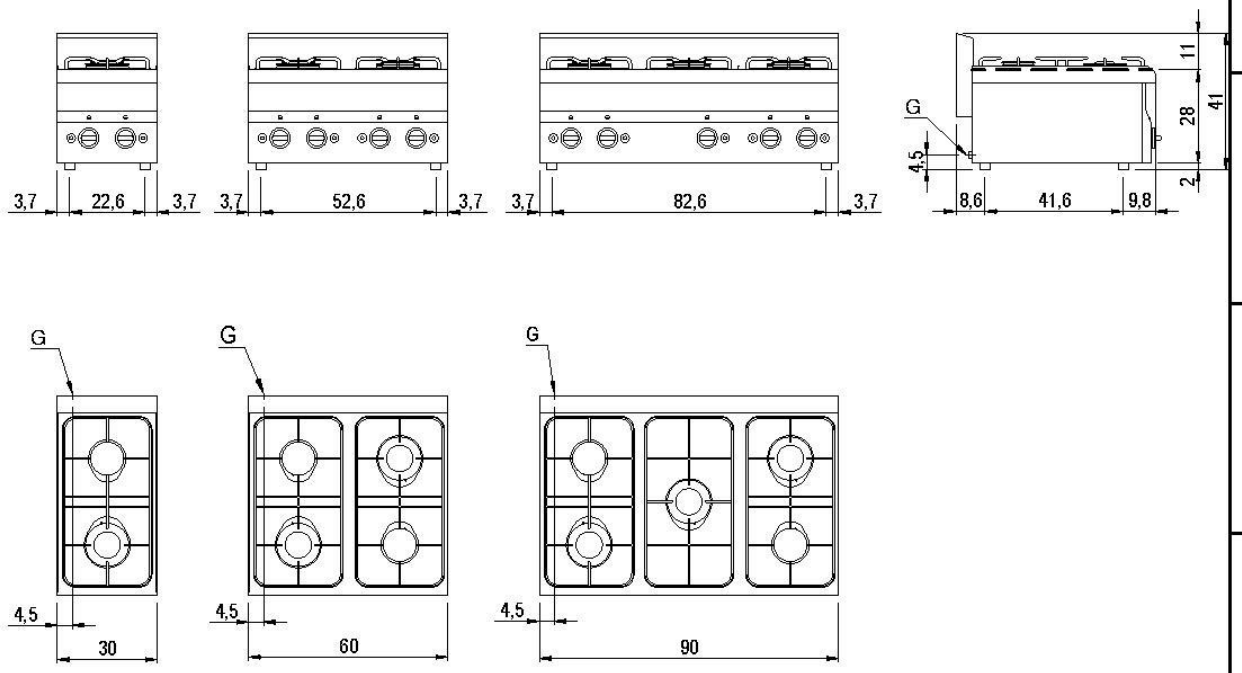

_60/...PCG.../P

Prima di intervenire sull' apparecchiatura, scollegare l' alimentazione elettrica
Unplug the power supply before operating on the appliance
Bevor am gerät arbeiten ausschalten srè die elektrische speisung
Avant d'intervenir sur l'appareil, dèconnectez l'alimentation èlectrique
Desconectar el alimentaciòn antes cualquier intervenciòn sobre el aparato

MISURE IN cm - DIMENSIONS IN cm - ABMESSUNGEN IN cm - MESURES EN cm - MEDIDAS EN cm - MATEN IN cm

G - Attacco arrivo gas - Gasanschluss - Gas connection Arrivée gaz - Union de gas - Gasaansluiting EN 10226-1 R 1/2; EN ISO 228-1 G 1/2 (DK)
E - Pressacavo entrata linea elettrica / Stopfbuchse / Electric cable stress relief / Presse étoupe de câble él Pisacable / Elektrische kabelwartel
D - Attacco scarico acqua - Wasserablauf - Water outlet - Vidange de l'eau - Desaguadero - Wateraftapaansluiting EN ISO 228-1 G 1
H2O - Attacco arrivo acqua - Wasseranschluss - ater inlet - Arrivée eau - Union de agua - Wateraansluiting EN ISO 228-1 G 3/4

SCHEMA DI INSTALLAZIONE INSTALLATION DIAGRAM INSTALLATIONSPLAN SCHEMA DE INSTALLATION ESQUEMA DE INSTALACIÓN	MODELLO CUCINE GAS GAS COUSINIER GAS RANGES GAS HERDE GAS COCINAS	DATA 11/10/2014 DISEGNATORE Pin S. CONTROLLATO Pin S. FOGLIO: 1/1	CODICE 2551151.00

LA DITTA SI RISERVA, A TERMINI DI LEGGE, LA PROPRIETA' DI QUESTO DISEGNO CON DIVIETO DI RIPRODURLO O RENDERLO PUBBLICO A TERZI SENZA LA SUA AUTORIZZAZIONE

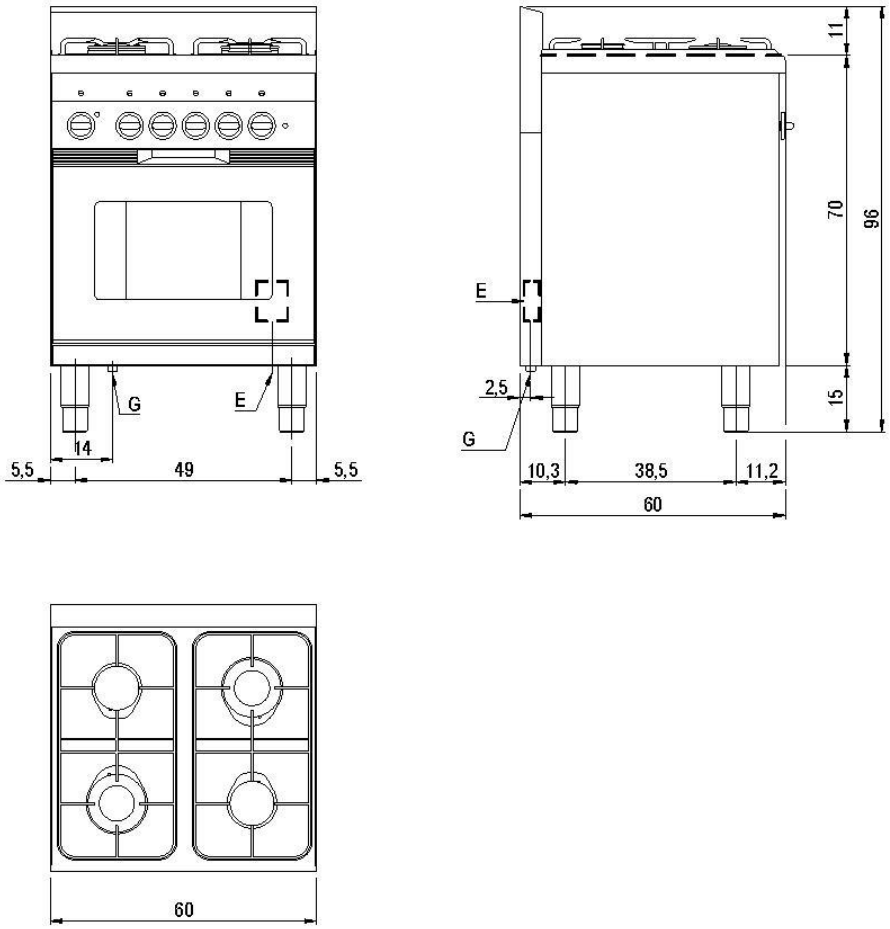

_60/...CFG

Prima di intervenire sull' apparecchiatura, scollegare l' alimentazione elettrica
Unplug the power supply before operating on the appliance
Bevor am gerät arbeiten ausschalten srê die elektrische speisung
Avant d'intervenir sur l'appareil, dèconnectez l'alimentation èlectrique
Desconectar el alimentaciòn antes cualquier intervenciòn sobre el aparato

MISURE IN cm - DIMENSIONS IN cm - ABMESSUNGEN IN cm - MESURES EN cm - MEDIDAS EN cm - MATEN IN cm

G - Attacco arrivo gas - Gasanschluss - Gas connection Arrivée gaz - Union de gas - Gasaansluiting EN 10226-1 R 1/2; EN ISO 228-1 G 1/2 (DK)
E - Pressacavo entrata linea elettrica / Stopfbuchse / Electric cable stress relief / Presse étoupe de câble él Pisacable / Elektrische kabelwartel
D - Attacco scarico acqua - Wasserablauf - Water outlet - Vidange de l'eau - Desaguadero - Wateraftapaansluiting EN ISO 228-1 G 1
H2O - Attacco arrivo acqua - Wasseranschluss - ater inlet - Arrivée eau - Union de agua - Wateraansluiting EN ISO 228-1 G 3/4

SCHEMA DI INSTALLAZIONE INSTALLATION DIAGRAM INSTALLATIONSPLAN SCHEMA DE INSTALLATION ESQUEMA DE INSTALACIÓN	MODELLO CUCINE GAS GAS COUSINIER GAS RANGES GAS HERDE GAS COCINAS	DATA 11/10/2014 DISEGNATORE Pin S. CONTROLLATO Pin S. FOGLIO: 1/1	CODICE 2551152.00

LA DITTA SI RISERVA, A TERMINI DI LEGGE, LA PROPRIETA' DI QUESTO DISEGNO CON DIVIETO DI RIPRODURLO O RENDERLO PUBBLICO A TERZI SENZA LA SUA AUTORIZZAZIONE

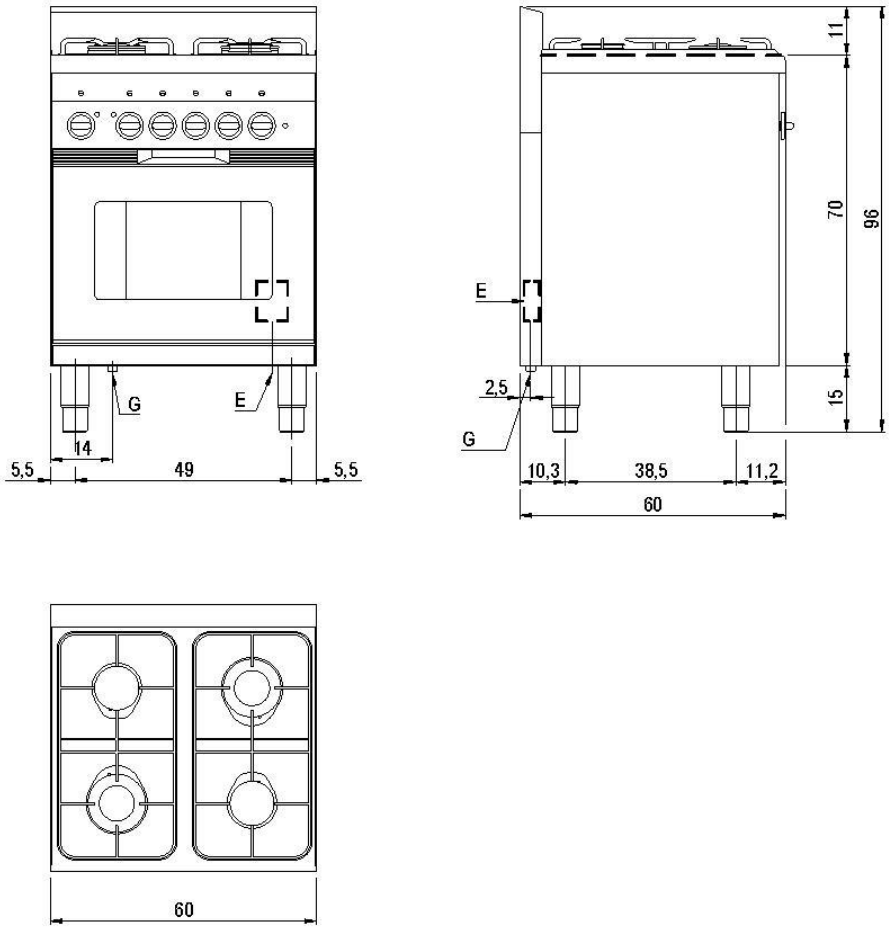

_60/...CFGE

Prima di intervenire sull' apparecchiatura, scollegare l' alimentazione elettrica
Unplug the power supply before operating on the appliance
Bevor am gerät arbeiten ausschalten srê die elektrische speisung
Avant d'intervenir sur l'appareil, dèconnectez l'alimentation èlectrique
Desconectar el alimentaciòn antes cualquier intervenciòn sobre el aparato

MISURE IN cm - DIMENSIONS IN cm - ABMESSUNGEN IN cm - MESURES EN cm - MEDIDAS EN cm - MATEN IN cm

G - Attacco arrivo gas - Gasanschluss - Gas connection Arrivée gaz - Union de gas - Gasaansluiting EN 10226-1 R 1/2; EN ISO 228-1 G 1/2 (DK)
E - Pressacavo entrata linea elettrica / Stopfbuchse / Electric cable stress relief / Presse étoupe de câble él Pisacable / Elektrische kabelwartel
D - Attacco scarico acqua - Wasserablauf - Water outlet - Vidange de l'eau - Desaguadero - Wateraftapaansluiting EN ISO 228-1 G 1
H2O - Attacco arrivo acqua - Wasseranschluss - ater inlet - Arrivée eau - Union de agua - Wateraansluiting EN ISO 228-1 G 3/4

SCHEMA DI INSTALLAZIONE INSTALLATION DIAGRAM INSTALLATIONSPLAN SCHEMA DE INSTALLATION ESQUEMA DE INSTALACIÓN	MODELLO CUCINE GAS/ELE GAS/EL COUSINIER GAS/EL RANGES GAS/EL HERDE GAS/EL COCINAS	DATA 11/10/2014 DISEGNATORE Pin S. CONTROLLATO Pin S. FOGLIO: 1/1	CODICE 2551153.00

LA DITTA SI RISERVA, A TERMINI DI LEGGE, LA PROPRIETA' DI QUESTO DISEGNO CON DIVIETO DI RIPRODURLO O RENDERLO PUBBLICO A TERZI SENZA LA SUA AUTORIZZAZIONE

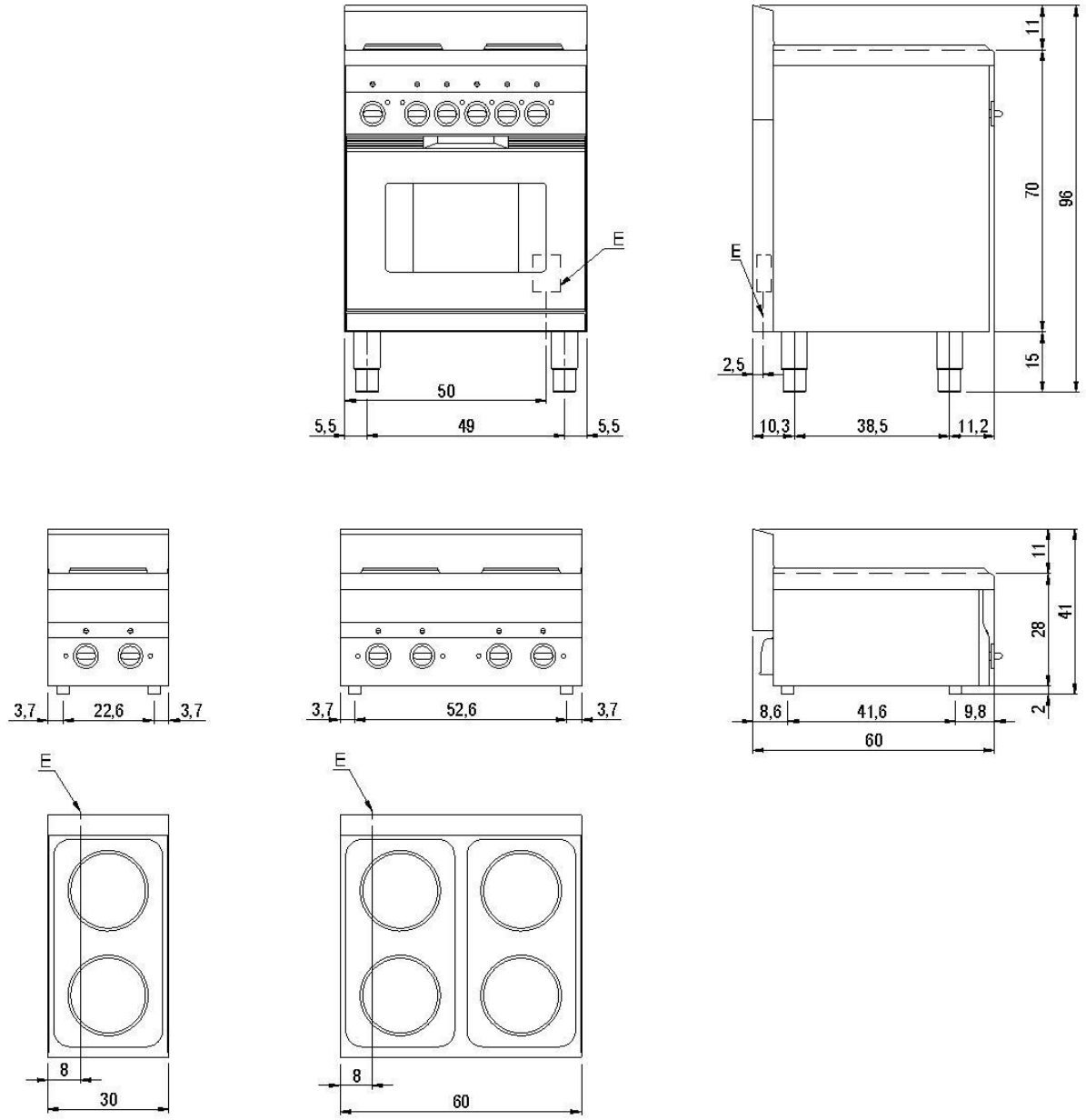

_60/...PCE...
_60/...CFE...

Prima di intervenire sull' apparecchiatura, scollegare l' alimentazione elettrica
Unplug the power supply before operating on the appliance
Bevor am gerät arbeiten ausschalten srè die elektrische speisung
Avant d'intervenir sur l'appareil, dèconnectez l'alimentation èlectrique
Desconectar el alimentaciòn antes cualquier intervenciòn sobre el aparato

MISURE IN cm - DIMENSIONS IN cm - ABMESSUNGEN IN cm - MESURES EN cm - MEDIDAS EN cm - MATEN IN cm

G - Attacco arrivo gas - Gasanschluss - Gas connection Arrivée gaz - Union de gas - Gasaansluiting EN 10226-1 R 1/2; EN ISO 228-1 G 1/2 (DK)
E - Pressacavo entrata linea elettrica / Stopfbuchse / Electric cable stress relief / Presse étoupe de câble él Pisacable / Elektrische kabelwartel
D - Attacco scarico acqua - Wasserablauf - Water outlet - Vidange de l'eau - Desaguadero - Wateraftapaansluiting EN ISO 228-1 G 1
H2O - Attacco arrivo acqua - Wasseranschluss - ater inlet - Arrivée eau - Union de agua - Wateraansluiting EN ISO 228-1 G 3/4

SCHEMA DI INSTALLAZIONE INSTALLATION DIAGRAM INSTALLATIONSPLAN SCHEMA DE INSTALLATION ESQUEMA DE INSTALACIÓN	MODELLO CUCINE ELETTRICHE EL. COUSINIERS EL. RANGES EL, HERDE EL. COCINAS	DATA 14/10/2014 DISEGNATORE Pin S. CONTROLLATO Pin S. FOGLIO: 1/1	CODICE 2551154.00

LA DITTA SI RISERVA, A TERMINI DI LEGGE, LA PROPRIETA' DI QUESTO DISEGNO CON DIVIETO DI RIPRODURLO O RENDERLO PUBBLICO A TERZI SENZA LA SUA AUTORIZZAZIONE

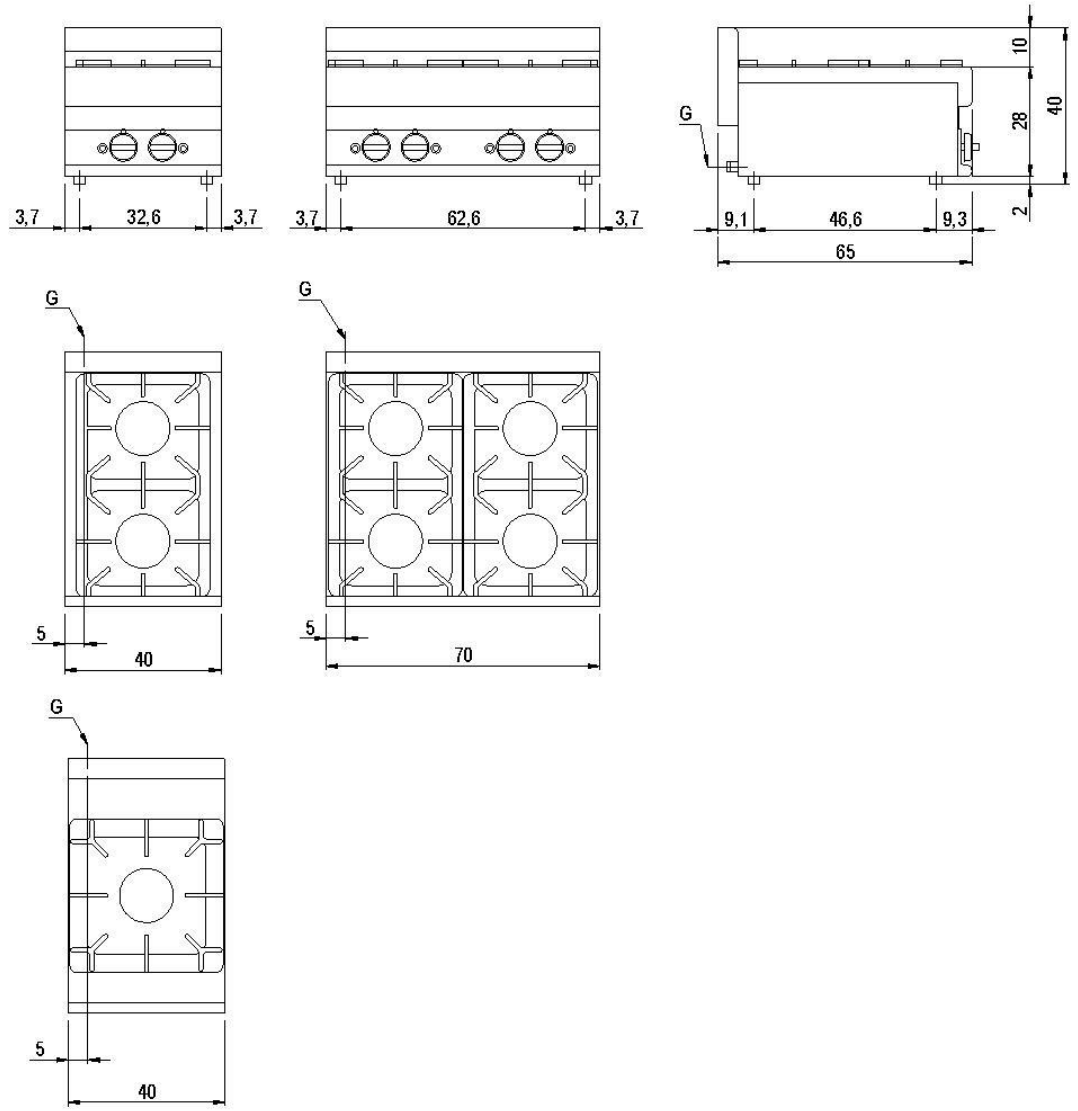

_65/...PCG
_65/...PG/40 P

Prima di intervenire sull' apparecchiatura, scollegare l' alimentazione elettrica
Unplug the power supply before operating on the appliance
Bevor am gerät arbeiten ausschalten srê die elektrische speisung
Avant d'intervenir sur l'appareil, déconnectez l'alimentation électrique
Desconectar el alimentaciòn antes cualquier intervenciòn sobre el aparato

MISURE IN cm - DIMENSIONS IN cm - ABMESSUNGEN IN cm - MESURES EN cm - MEDIDAS EN cm - MATEN IN cm

G - Attacco arrivo gas - Gasanschluss - Gas connection Arrivée gaz - Union de gas - Gasaansluiting EN 10226-1 R 1/2; EN ISO 228-1 G 1/2 (DK)
E - Pressacavo entrata linea elettrica / Stopfbuchse / Electric cable stress relief / Presse étoupe de câble él Pisacable / Elektrische kabelwartel
D - Attacco scarico acqua - Wasserablauf - Water outlet - Vidange de l'eau - Desaguadero - Wateraftapaansluiting EN ISO 228-1 G 1
H2O - Attacco arrivo acqua - Wasseranschluss - ater inlet - Arrivée eau - Union de agua - Wateraansluiting EN ISO 228-1 G 3/4

SCHEMA DI INSTALLAZIONE INSTALLATION DIAGRAM INSTALLATIONSPLAN SCHEMA DE INSTALLATION ESQUEMA DE INSTALACIÓN	MODELLO CUCINE GAS GAS COUSINIER GAS RANGES GAS HERDE GAS COCINAS	DATA 11/10/2014 DISEGNATORE Pin S. CONTROLLATO Pin S. FOGLIO: 1/1	CODICE 2551155.00

LA DITTA SI RISERVA, A TERMINI DI LEGGE, LA PROPRIETA' DI QUESTO DISEGNO CON DIVIETO DI RIPRODURLO O RENDERLO PUBBLICO A TERZI SENZA LA SUA AUTORIZZAZIONE

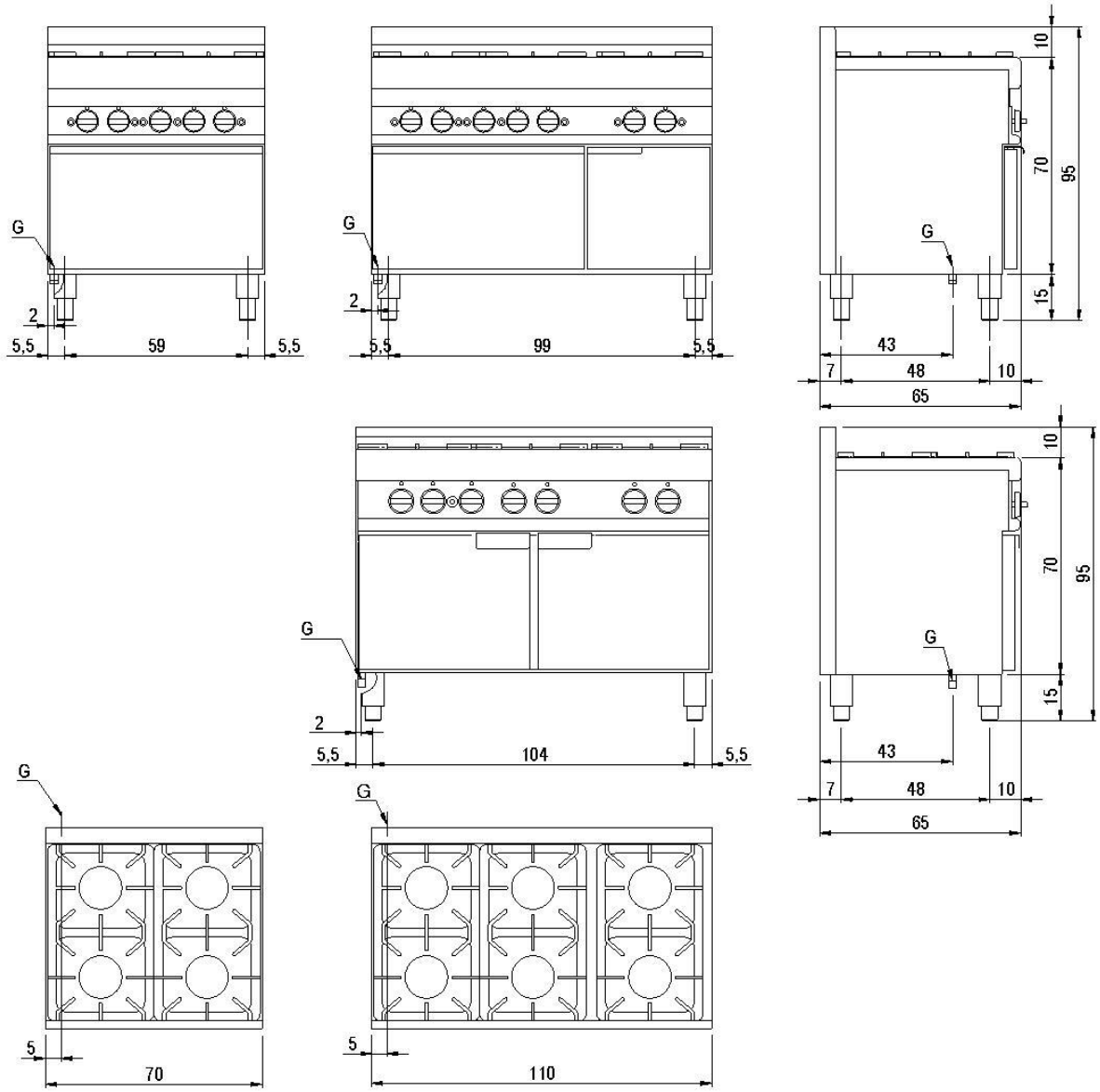

_65/...CFG
_65/...CFGG

Prima di intervenire sull' apparecchiatura, scollegare l' alimentazione elettrica
Unplug the power supply before operating on the appliance
Bevor am gerät arbeiten ausschalten srè die elektrische speisung
Avant d'intervenir sur l'appareil, dèconnectez l'alimentation èlectrique
Desconectar el alimentaciòn antes cualquier intervenciòn sobre el aparato

MISURE IN cm - DIMENSIONS IN cm - ABMESSUNGEN IN cm - MESURES EN cm - MEDIDAS EN cm - MATEN IN cm

G - Attacco arrivo gas - Gasanschluss - Gas connection Arrivée gaz - Union de gas - Gasaansluiting EN 10226-1 R 1/2; EN ISO 228-1 G 1/2 (DK)
E - Pressacavo entrata linea elettrica / Stopfbuchse / Electric cable stress relief / Presse étoupe de câble él Pisacable / Elektrische kabelwartel
D - Attacco scarico acqua - Wasserablauf - Water outlet - Vidange de l'eau - Desaguadero - Wateraftapaansluiting EN ISO 228-1 G 1
H2O - Attacco arrivo acqua - Wasseranschluss - ater inlet - Arrivée eau - Union de agua - Wateraansluiting EN ISO 228-1 G 3/4

SCHEMA DI INSTALLAZIONE INSTALLATION DIAGRAM INSTALLATIONSPLAN SCHEMA DE INSTALLATION ESQUEMA DE INSTALACIÓN	MODELLO CUCINE GAS GAS COUSINIER GAS RANGES GAS HERDE GAS COCINAS	DATA 11/10/2014 DISEGNATORE Pin S. CONTROLLATO Pin S. FOGLIO: 1/1	CODICE 2551156.00

LA DITTA SI RISERVA, A TERMINI DI LEGGE, LA PROPRIETA' DI QUESTO DISEGNO CON DIVIETO DI RIPRODURLO O RENDERLO PUBBLICO A TERZI SENZA LA SUA AUTORIZZAZIONE

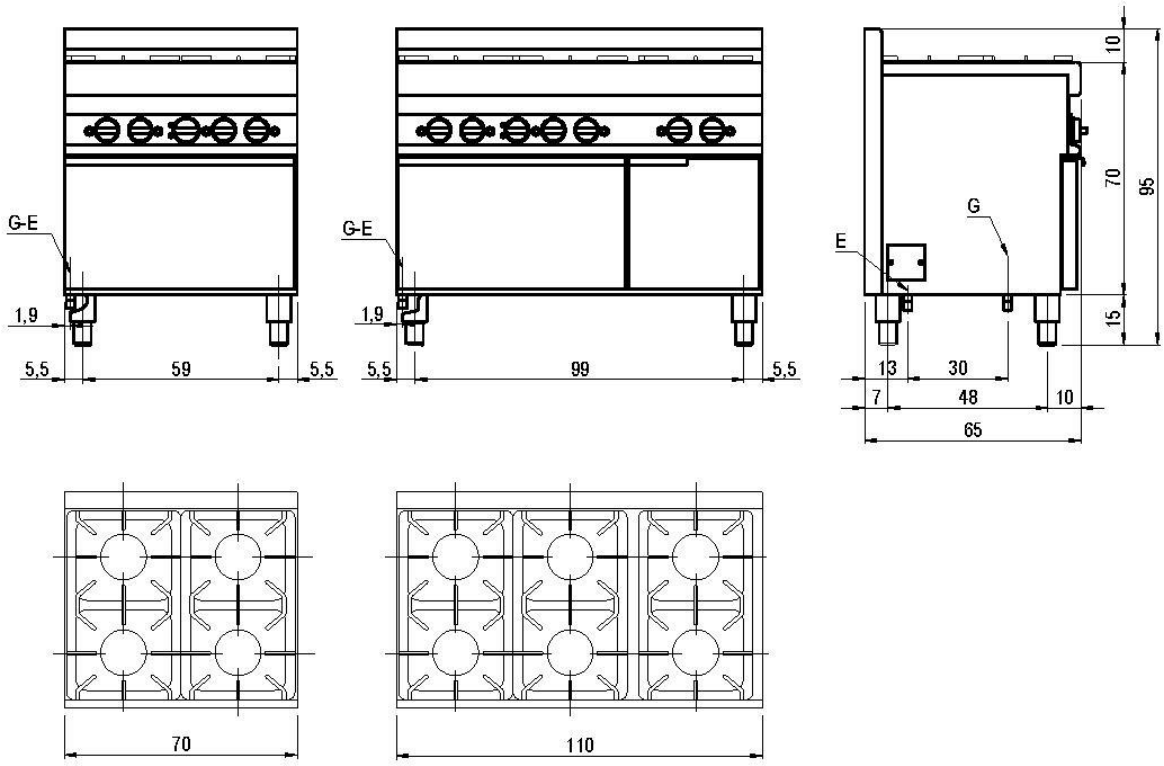

_65/...CFGE

Prima di intervenire sull' apparecchiatura, scollegare l' alimentazione elettrica
Unplug the power supply before operating on the appliance
Bevor am gerät arbeiten ausschalten srè die elektrische speisung
Avant d'intervenir sur l'appareil, dèconnectez l'alimentation èlectrique
Desconectar el alimentaciòn antes cualquier intervenciòn sobre el aparato

MISURE IN cm - DIMENSIONS IN cm - ABMESSUNGEN IN cm - MESURES EN cm - MEDIDAS EN cm - MATEN IN cm

G - Attacco arrivo gas - Gasanschluss - Gas connection Arrivée gaz - Union de gas - Gasaansluiting EN 10226-1 R 1/2; EN ISO 228-1 G 1/2 (DK)
E - Pressacavo entrata linea elettrica / Stopfbuchse / Electric cable stress relief / Presse étoupe de câble él Pisacable / Elektrische kabelwartel
D - Attacco scarico acqua - Wasserablauf - Water outlet - Vidange de l'eau - Desaguadero - Wateraftapaansluiting EN ISO 228-1 G 1
H2O - Attacco arrivo acqua - Wasseranschluss - ater inlet - Arrivée eau - Union de agua - Wateraansluiting EN ISO 228-1 G 3/4

SCHEMA DI INSTALLAZIONE INSTALLATION DIAGRAM INSTALLATIONSPLAN SCHEMA DE INSTALLATION ESQUEMA DE INSTALACIÓN	MODELLO CUCINE GAS/ELE GAS/EL COUSINIER GAS/EL RANGES GAS/EL HERDE GAS/EL COCINAS	DATA 11/10/2014 DISEGNATORE Pin S. CONTROLLATO Pin S. FOGLIO: 1/1	CODICE 2551157.00

LA DITTA SI RISERVA, A TERMINI DI LEGGE, LA PROPRIETA' DI QUESTO DISEGNO CON DIVIETO DI RIPRODURLO O RENDERLO PUBBLICO A TERZI SENZA LA SUA AUTORIZZAZIONE

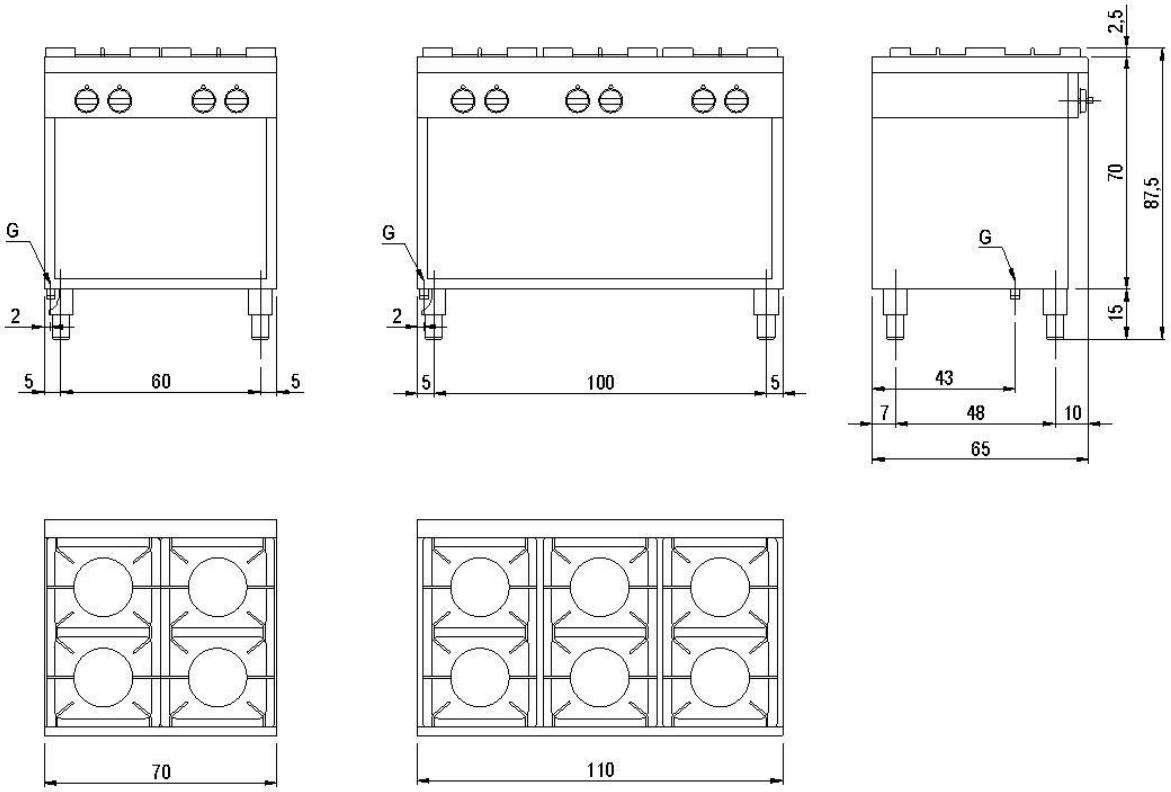

_CEG/70
_CEG/110

Prima di intervenire sull' apparecchiatura, scollegare l' alimentazione elettrica
Unplug the power supply before operating on the appliance
Bevor am gerät arbeiten ausschalten srè die elektrische speisung
Avant d'intervenir sur l'appareil, dèconnectez l'alimentation èlectrique
Desconectar el alimentaciòn antes cualquier intervenciòn sobre el aparato

MISURE IN cm - DIMENSIONS IN cm - ABMESSUNGEN IN cm - MESURES EN cm - MEDIDAS EN cm - MATEN IN cm

G - Attacco arrivo gas - Gasanschluss - Gas connection Arrivée gaz - Union de gas - Gasaansluiting EN 10226-1 R 1/2; EN ISO 228-1 G 1/2 (DK)
E - Pressacavo entrata linea elettrica / Stopfbuchse / Electric cable stress relief / Presse étoupe de câble él Pisacable / Elektrische kabelwartel
D - Attacco scarico acqua - Wasserablauf - Water outlet - Vidange de l'eau - Desaguadero - Wateraftapaansluiting EN ISO 228-1 G 1
H2O - Attacco arrivo acqua - Wasseranschluss - ater inlet - Arrivée eau - Union de agua - Wateraansluiting EN ISO 228-1 G 3/4

SCHEMA DI INSTALLAZIONE INSTALLATION DIAGRAM INSTALLATIONSPLAN SCHEMA DE INSTALLATION ESQUEMA DE INSTALACIÓN	MODELLO CUCINE GAS GAS COUSINIER GAS RANGES GAS HERDE GAS COCINAS	DATA 11/10/2014 DISEGNATORE Pin S. CONTROLLATO Pin S. FOGLIO: 1/1	CODICE 2551158.00

LA DITTA SI RISERVA, A TERMINI DI LEGGE, LA PROPRIETA' DI QUESTO DISEGNO CON DIVIETO DI RIPRODURLO O RENDERLO PUBBLICO A TERZI SENZA LA SUA AUTORIZZAZIONE

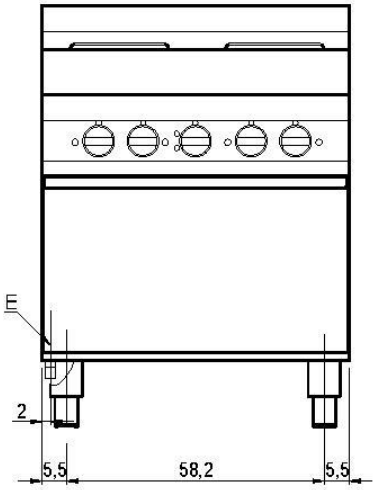

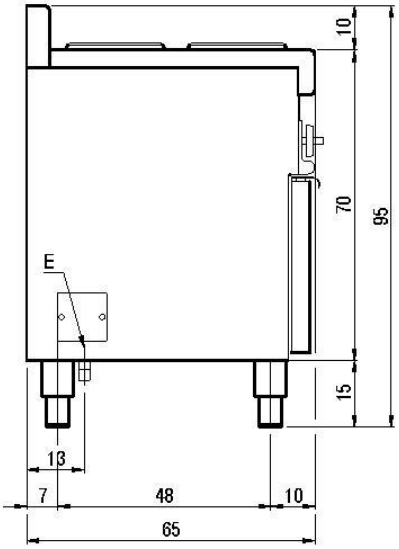

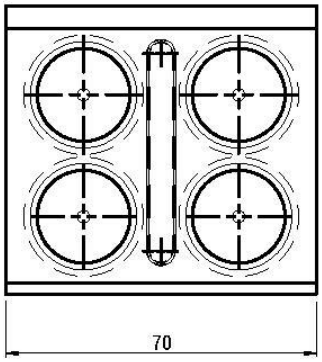

_65/...CFE...

Prima di intervenire sull' apparecchiatura, scollegare l' alimentazione elettrica
Unplug the power supply before operating on the appliance
Bevor am gerät arbeiten ausschalten srê die elektrische speisung
Avant d'intervenir sur l'appareil, dèconnectez l'alimentation èlectrique
Desconectar el alimentaciòn antes cualquier intervenciòn sobre el aparato

MISURE IN cm - DIMENSIONS IN cm - ABMESSUNGEN IN cm - MESURES EN cm - MEDIDAS EN cm - MATEN IN cm

G - Attacco arrivo gas - Gasanschluss - Gas connection Arrivée gaz - Union de gas - Gasaansluiting EN 10226-1 R 1/2; EN ISO 228-1 G 1/2 (DK)
E - Pressacavo entrata linea elettrica / Stopfbuchse / Electric cable stress relief / Presse étoupe de câble él Pisacable / Elektrische kabelwartel
D - Attacco scarico acqua - Wasserablauf - Water outlet - Vidange de l'eau - Desaguadero - Wateraftapaansluiting EN ISO 228-1 G 1
H2O - Attacco arrivo acqua - Wasseranschluss - ater inlet - Arrivée eau - Union de agua - Wateraansluiting EN ISO 228-1 G 3/4

SCHEMA DI INSTALLAZIONE INSTALLATION DIAGRAM INSTALLATIONSPLAN SCHEMA DE INSTALLATION ESQUEMA DE INSTALACIÓN	MODELLO CUCINE ELETTRICHE EL. COUSINIERS EL. RANGES EL, HERDE EL. COCINAS	DATA 14/10/2014 DISEGNATORE Pin S. CONTROLLATO Pin S. FOGLIO: 1/1	CODICE 2551159.00

LA DITTA SI RISERVA, A TERMINI DI LEGGE, LA PROPRIETA' DI QUESTO DISEGNO CON DIVIETO DI RIPRODURLO O RENDERLO PUBBLICO A TERZI SENZA LA SUA AUTORIZZAZIONE

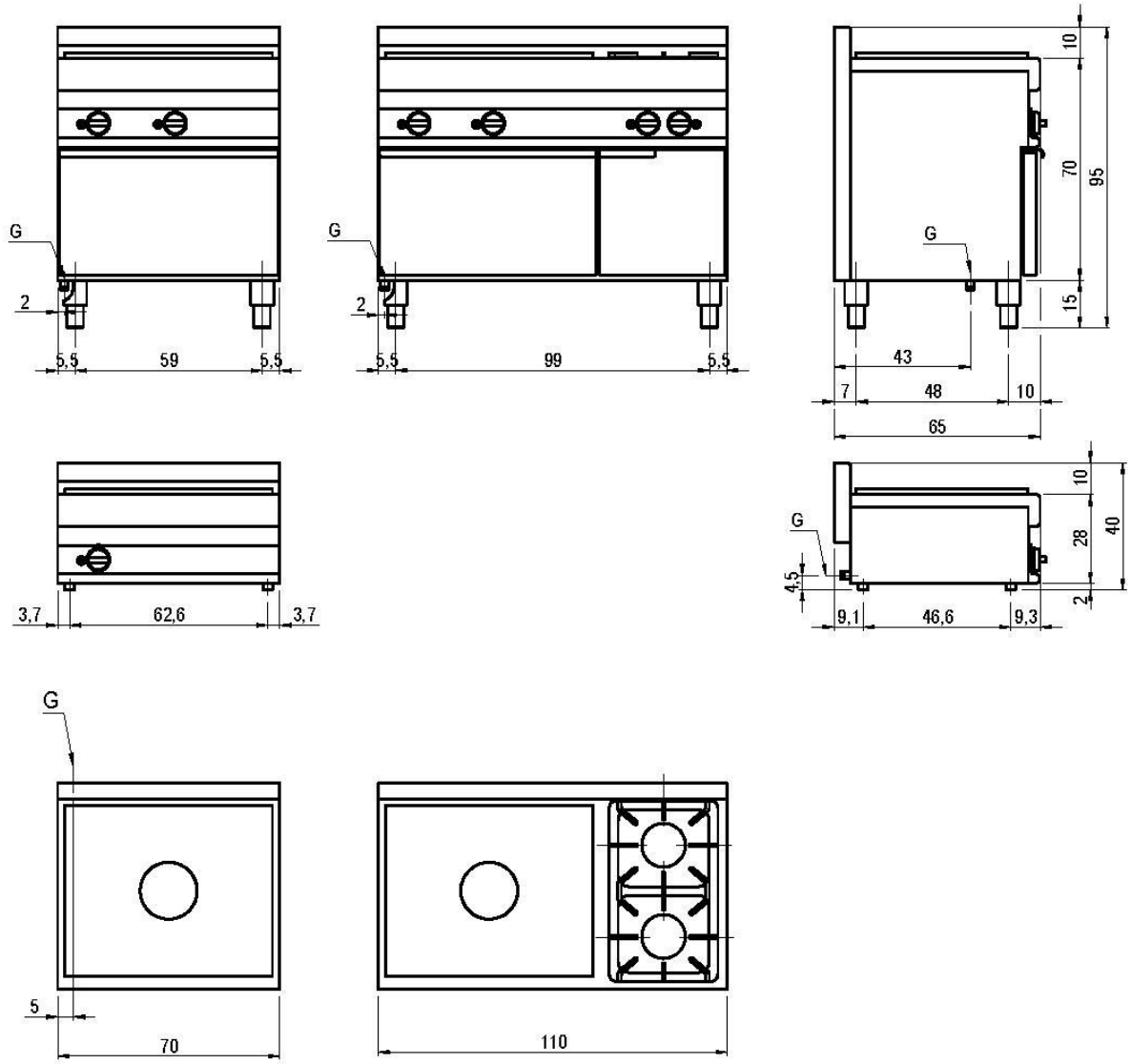

_65/...TPG-T
_65/...TPG
_65/...TPFG

Prima di intervenire sull' apparecchiatura, scollegare l' alimentazione elettrica
Unplug the power supply before operating on the appliance
Bevor am gerät arbeiten ausschalten srè die elektrische speisung
Avant d'intervenir sur l'appareil, dèconnectez l'alimentation èlectrique
Desconectar el alimentaciòn antes cualquier intervenciòn sobre el aparato

MISURE IN cm - DIMENSIONS IN cm - ABMESSUNGEN IN cm - MESURES EN cm - MEDIDAS EN cm - MATEN IN cm

G - Attacco arrivo gas - Gasanschluss - Gas connection Arrivée gaz - Union de gas - Gasaansluiting EN 10226-1 R 1/2; EN ISO 228-1 G 1/2 (DK)
E - Pressacavo entrata linea elettrica / Stopfbuchse / Electric cable stress relief / Presse étoupe de câble él Pisacable / Elektrische kabelwartel
D - Attacco scarico acqua - Wasserablauf - Water outlet - Vidange de l'eau - Desaguadero - Wateraftapaansluiting EN ISO 228-1 G 1
H2O - Attacco arrivo acqua - Wasseranschluss - ater inlet - Arrivée eau - Union de agua - Wateraansluiting EN ISO 228-1 G 3/4

SCHEMA DI INSTALLAZIONE INSTALLATION DIAGRAM INSTALLATIONSPLAN SCHEMA DE INSTALLATION ESQUEMA DE INSTALACIÓN	MODELLO TUTTAPIASTRA A GAS COUP DE FEU SOLID TOPS GLÜHPLATTENHERD PLACAS RADIANES	DATA 11/10/2014 DISEGNATORE Pin S. CONTROLLATO Pin S. FOGLIO: 1/1	CODICE 2551160.00

LA DITTA SI RISERVA, A TERMINI DI LEGGE, LA PROPRIETA' DI QUESTO DISEGNO CON DIVIETO DI RIPRODURLO O RENDERLO PUBBLICO A TERZI SENZA LA SUA AUTORIZZAZIONE

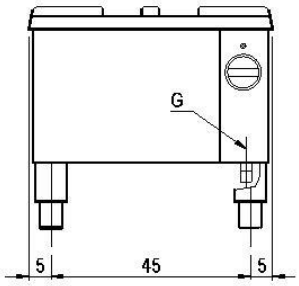

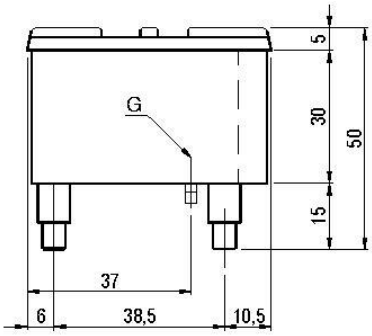

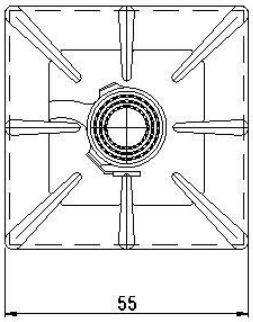

_FPG/55

Prima di intervenire sull' apparecchiatura, scollegare l' alimentazione elettrica
Unplug the power supply before operating on the appliance
Bevor am gerät arbeiten ausschalten srè die elektrische speisung
Avant d'intervenir sur l'appareil, dèconnectez l'alimentation èlectrique
Desconectar el alimentaciòn antes cualquier intervenciòn sobre el aparato

MISURE IN cm - DIMENSIONS IN cm - ABMESSUNGEN IN cm - MESURES EN cm - MEDIDAS EN cm - MATEN IN cm

G - Attacco arrivo gas - Gasanschluss - Gas connection Arrivée gaz - Union de gas - Gasaansluiting EN 10226-1 R 1/2; EN ISO 228-1 G 1/2 (DK)
E - Pressacavo entrata linea elettrica / Stopfbuchse / Electric cable stress relief / Presse étoupe de câble él Pisacable / Elektrische kabelwartel
D - Attacco scarico acqua - Wasserablauf - Water outlet - Vidange de l'eau - Desaguadero - Wateraftapaansluiting EN ISO 228-1 G 1
H2O - Attacco arrivo acqua - Wasseranschluss - ater inlet - Arrivée eau - Union de agua - Wateraansluiting EN ISO 228-1 G 3/4

SCHEMA DI INSTALLAZIONE INSTALLATION DIAGRAM INSTALLATIONSPLAN SCHEMA DE INSTALLATION ESQUEMA DE INSTALACIÓN	MODELLO CUCINE GAS GAS COUSINIER GAS RANGES GAS HERDE GAS COCINAS	DATA 11/10/2014 DISEGNATORE Pin S. CONTROLLATO Pin S. FOGLIO: 1/1	CODICE 2551161.00

LA DITTA SI RISERVA, A TERMINI DI LEGGE, LA PROPRIETA' DI QUESTO DISEGNO CON DIVIETO DI RIPRODURLO O RENDERLO PUBBLICO A TERZI SENZA LA SUA AUTORIZZAZIONE

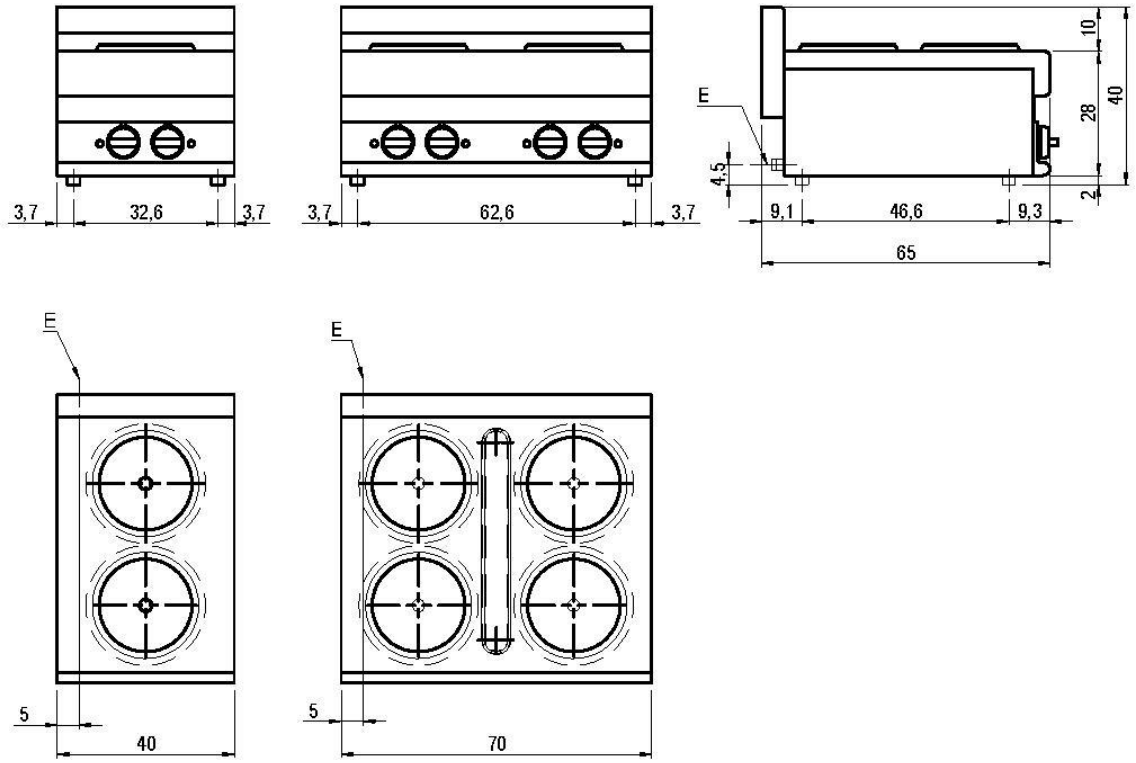

_65/...PCE...

Prima di intervenire sull' apparecchiatura, scollegare l' alimentazione elettrica
Unplug the power supply before operating on the appliance
Bevor am gerät arbeiten ausschalten srè die elektrische speisung
Avant d'intervenir sur l'appareil, dèconnectez l'alimentation èlectrique
Desconectar el alimentaciòn antes cualquier intervenciòn sobre el aparato

MISURE IN cm - DIMENSIONS IN cm - ABMESSUNGEN IN cm - MESURES EN cm - MEDIDAS EN cm - MATEN IN cm

G - Attacco arrivo gas - Gasanschluss - Gas connection Arrivée gaz - Union de gas - Gasaansluiting EN 10226-1 R 1/2; EN ISO 228-1 G 1/2 (DK)
E - Pressacavo entrata linea elettrica / Stopfbuchse / Electric cable stress relief / Presse étoupe de câble él Pisacable / Elektrische kabelwartel
D - Attacco scarico acqua - Wasserablauf - Water outlet - Vidange de l'eau - Desaguadero - Wateraftapaansluiting EN ISO 228-1 G 1
H2O - Attacco arrivo acqua - Wasseranschluss - ater inlet - Arrivée eau - Union de agua - Wateraansluiting EN ISO 228-1 G 3/4

SCHEMA DI INSTALLAZIONE INSTALLATION DIAGRAM INSTALLATIONSPLAN SCHEMA DE INSTALLATION ESQUEMA DE INSTALACIÓN	MODELLO CUCINE ELETTRICHE EL. COUSINIERS EL. RANGES EL, HERDE EL. COCINAS	DATA 14/10/2014 DISEGNATORE Pin S. CONTROLLATO Pin S. FOGLIO: 1/1	CODICE 2551162.00

LA DITTA SI RISERVA, A TERMINI DI LEGGE, LA PROPRIETA' DI QUESTO DISEGNO CON DIVIETO DI RIPRODURLO O RENDERLO PUBBLICO A TERZI SENZA LA SUA AUTORIZZAZIONE

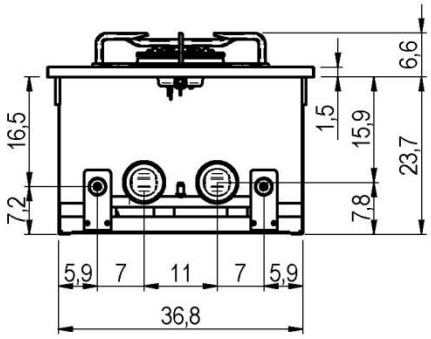

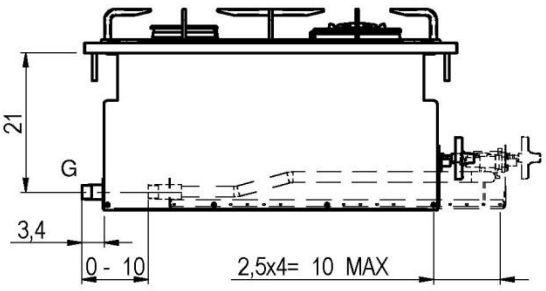

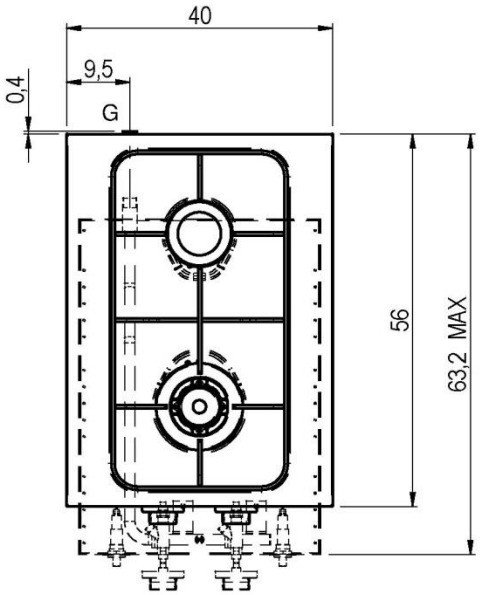

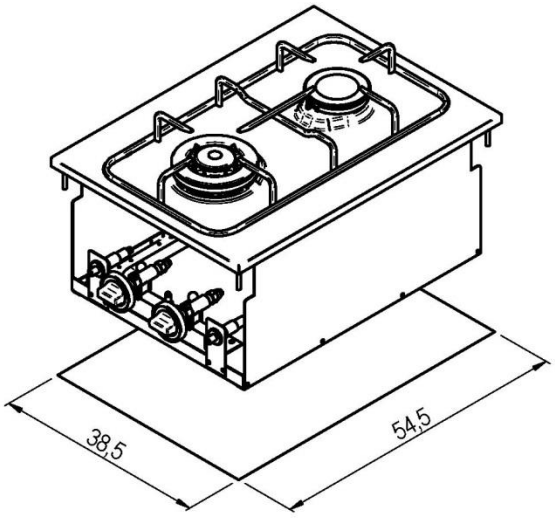

60/40 PCG-D

Prima di intervenire sull' apparecchiatura, scollegare l' alimentazione elettrica
Unplug the power supply before operating on the appliance
Bevor am gerät arbeiten ausschalten srè die elektrische speisung
Avant d'intervenir sur l'appareil, dèconnectez l'alimentation èlectrique
Desconectar el alimentaciòn antes cualquier intervenciòn sobre el aparato

MISURE IN cm - DIMENSIONS IN cm - ABMESSUNGEN IN cm - MESURES EN cm - MEDIDAS EN cm - MATEN IN cm

G - Attacco arrivo gas - Gasanschluss - Gas connection Arrivée gaz - Union de gas - Gasaansluiting EN 10226-1 R 1/2; EN ISO 228-1 G 1/2 (DK)
E - Pressacavo entrata linea elettrica / Stopfbuchse / Electric cable stress relief / Presse étoupe de câble él Pisacable / Elektrische kabelwartel
D - Attacco scarico acqua - Wasserablauf - Water outlet - Vidange de l'eau - Desaguadero - Wateraftapaansluiting EN ISO 228-1 G 1
H2O - Attacco arrivo acqua - Wasseranschluss - ater inlet - Arrivée eau - Union de agua - Wateraansluiting EN ISO 228-1 G 3/4

SCHEMA DI INSTALLAZIONE INSTALLATION DIAGRAM INSTALLATIONSPLAN SCHEMA DE INSTALLATION ESQUEMA DE INSTALACIÓN	**MODELLO** PIANO COTTURA GAS DROP IN GAS BOILING UNIT DROP IN GASKOCHFELD DROP IN PLAN CUISSON GAZ DROP IN COCINA A GAS DROP IN	DATA 18/12/2014 DISEGNATORE Possamai F. CONTROLLATO Possamai F. **FOGLIO: 1/1**	**CODICE** **2551074.00**

LA DITTA SI RISERVA, A TERMINI DI LEGGE, LA PROPRIETA' DI QUESTO DISEGNO CON DIVIETO DI RIPRODURLO O RENDERLO PUBBLICO A TERZI SENZA LA SUA AUTORIZZAZIONE

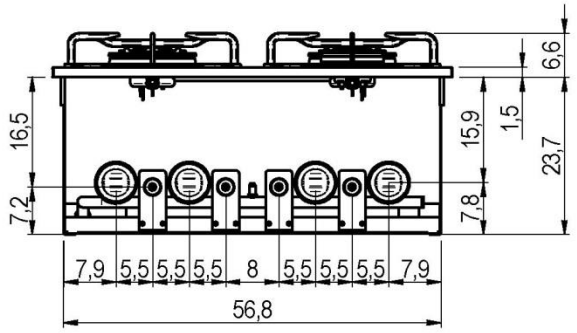

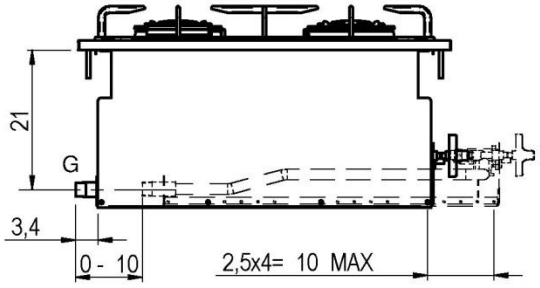

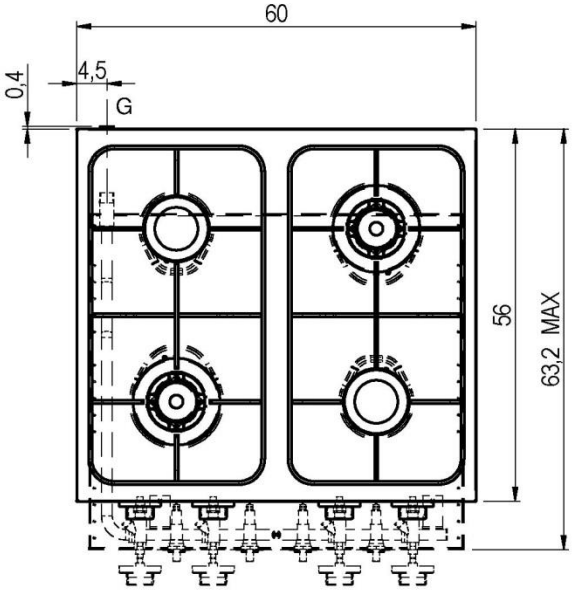

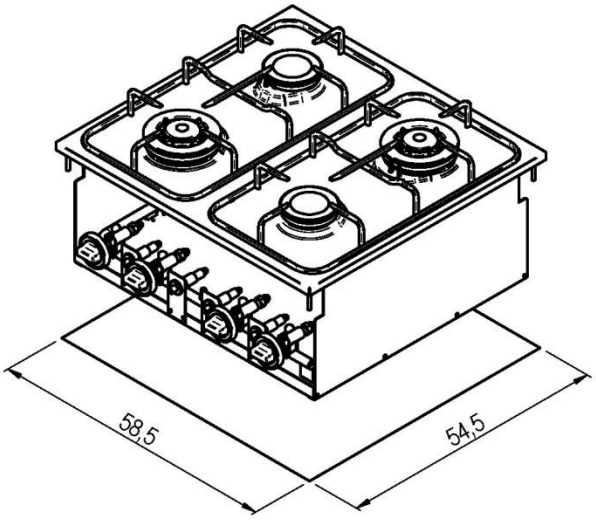

60/60 PCG-D

Prima di intervenire sull' apparecchiatura, scollegare l' alimentazione elettrica
Unplug the power supply before operating on the appliance
Bevor am gerät arbeiten ausschalten srè die elektrische speisung
Avant d'intervenir sur l'appareil, dèconnectez l'alimentation èlectrique
Desconectar el alimentaciòn antes cualquier intervenciòn sobre el aparato

MISURE IN cm - DIMENSIONS IN cm - ABMESSUNGEN IN cm - MESURES EN cm - MEDIDAS EN cm - MATEN IN cm

G - Attacco arrivo gas - Gasanschluss - Gas connection Arrivée gaz - Union de gas - Gasaansluiting EN 10226-1 R 1/2; EN ISO 228-1 G 1/2 (DK)
E - Pressacavo entrata linea elettrica / Stopfbuchse / Electric cable stress relief / Presse étoupe de câble él Pisacable / Elektrische kabelwartel
D - Attacco scarico acqua - Wasserablauf - Water outlet - Vidange de l'eau - Desaguadero - Wateraftapaansluiting EN ISO 228-1 G 1
H2O - Attacco arrivo acqua - Wasseranschluss - ater inlet - Arrivée eau - Union de agua - Wateraansluiting EN ISO 228-1 G 3/4

SCHEMA DI INSTALLAZIONE INSTALLATION DIAGRAM INSTALLATIONSPLAN SCHEMA DE INSTALLATION ESQUEMA DE INSTALACIÓN	**MODELLO** PIANO COTTURA GAS DROP IN GAS BOILING UNIT DROP -IN GASKOCHFELD DROP IN PLAN CUISSON GAZ DROP IN COCINA A GAS DROP IN	DATA 18/12/2014 DISEGNATORE Possamai F. CONTROLLATO Possamai F. **FOGLIO: 1/1**	**CODICE** **2551075.00**	

LA DITTA SI RISERVA, A TERMINI DI LEGGE, LA PROPRIETA' DI QUESTO DISEGNO CON DIVIETO DI RIPRODURLO O RENDERLO PUBBLICO A TERZI SENZA LA SUA AUTORIZZAZIONE

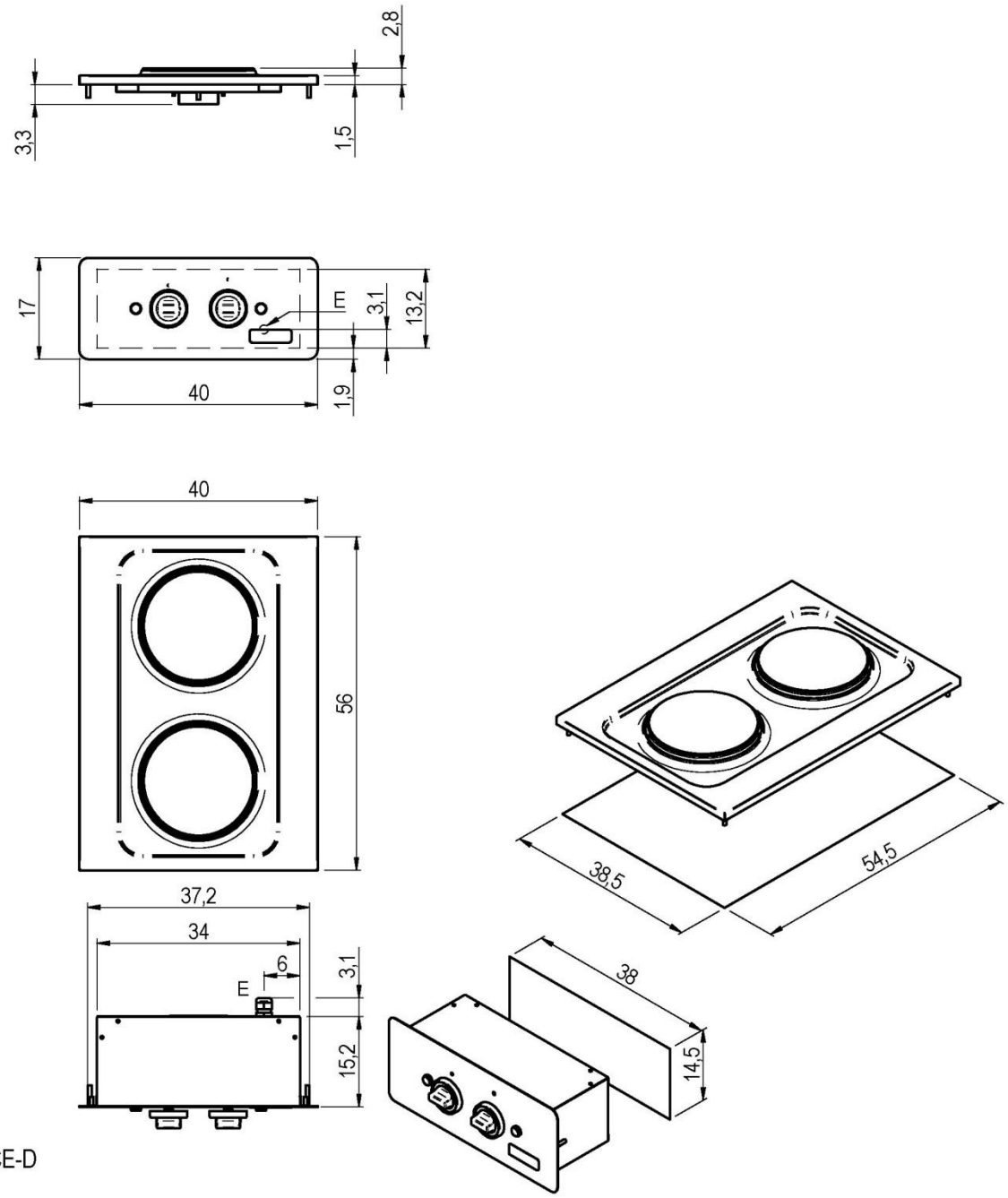

60/40 PCE-D

Prima di intervenire sull' apparecchiatura, scollegare l' alimentazione elettrica
Unplug the power supply before operating on the appliance
Bevor am gerät arbeiten ausschalten srè die elektrische speisung
Avant d'intervenir sur l'appareil, dèconnectez l'alimentation èlectrique
Desconectar el alimentaciòn antes cualquier intervenciòn sobre el aparato

MISURE IN cm - DIMENSIONS IN cm - ABMESSUNGEN IN cm - MESURES EN cm - MEDIDAS EN cm - MATEN IN cm

G - Attacco arrivo gas - Gasanschluss - Gas connection Arrivée gaz - Union de gas - Gasaansluiting EN 10226-1 R 1/2; EN ISO 228-1 G 1/2 (DK)
E - Pressacavo entrata linea elettrica / Stopfbuchse / Electric cable stress relief / Presse étoupe de câble él Pisacable / Elektrische kabelwartel
D - Attacco scarico acqua - Wasserablauf - Water outlet - Vidange de l'eau - Desaguadero - Wateraftapaansluiting EN ISO 228-1 G 1
H2O - Attacco arrivo acqua - Wasseranschluss - ater inlet - Arrivée eau - Union de agua - Wateraansluiting EN ISO 228-1 G 3/4

SCHEMA DI INSTALLAZIONE INSTALLATION DIAGRAM INSTALLATIONSPLAN SCHEMA DE INSTALLATION ESQUEMA DE INSTALACIÓN	**MODELLO** PIANO COTTURA ELETTRICO DROP IN ELECTRIC COOKING TOP DROP IN ELEKTROKOCHFELD DROP IN TABLE DE CUISSON ELECTRIQUE DROP IN PLANO DE COCCION ELÉCTRICO DROP IN	DATA 18/12/2014 DISEGNATORE Possamai F. CONTROLLATO Possamai F. **FOGLIO: 1/1**	**CODICE** **2551076.00**

LA DITTA SI RISERVA, A TERMINI DI LEGGE, LA PROPRIETA' DI QUESTO DISEGNO CON DIVIETO DI RIPRODURLO O RENDERLO PUBBLICO A TERZI SENZA LA SUA AUTORIZZAZIONE

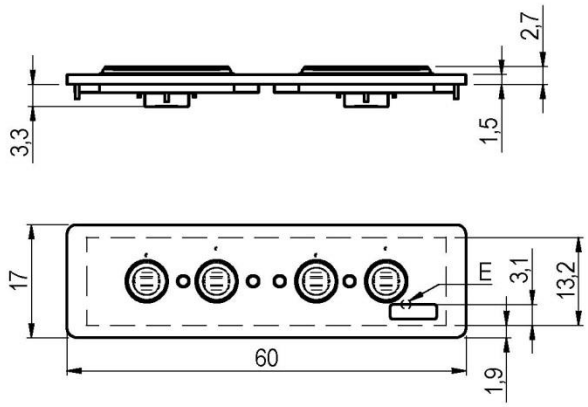

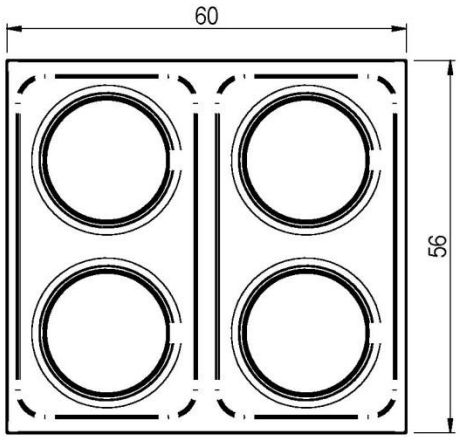

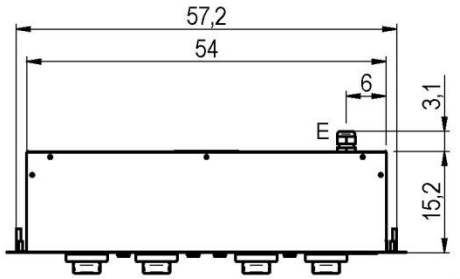

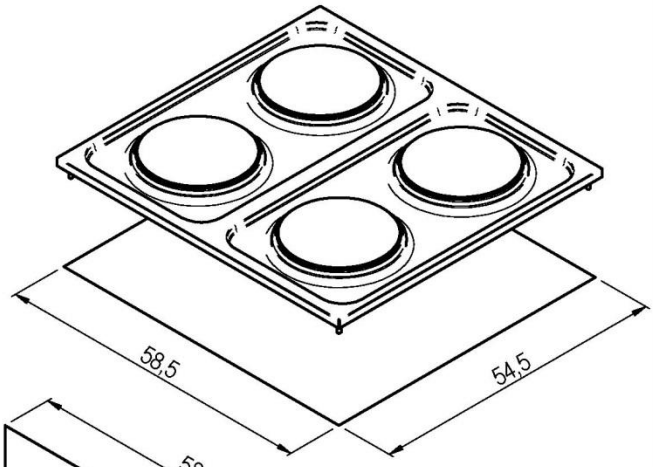

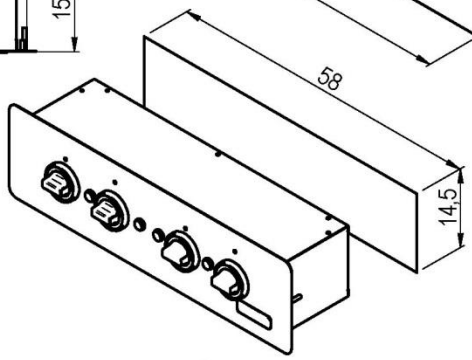

60/60 PCE-D

Prima di intervenire sull' apparecchiatura, scollegare l' alimentazione elettrica
Unplug the power supply before operating on the appliance
Bevor am gerät arbeiten ausschalten srè die elektrische speisung
Avant d'intervenir sur l'appareil, dèconnectez l'alimentation èlectrique
Desconectar el alimentaciòn antes cualquier intervenciòn sobre el aparato

MISURE IN cm - DIMENSIONS IN cm - ABMESSUNGEN IN cm - MESURES EN cm - MEDIDAS EN cm - MATEN IN cm

G - Attacco arrivo gas - Gasanschluss - Gas connection Arrivée gaz - Union de gas - Gasaansluiting EN 10226-1 R 1/2; EN ISO 228-1 G 1/2 (DK)
E - Pressacavo entrata linea elettrica / Stopfbuchse / Electric cable stress relief / Presse étoupe de câble él Pisacable / Elektrische kabelwartel
D - Attacco scarico acqua - Wasserablauf - Water outlet - Vidange de l'eau - Desaguadero - Wateraftapaansluiting EN ISO 228-1 G 1
H2O - Attacco arrivo acqua - Wasseranschluss - ater inlet - Arrivée eau - Union de agua - Wateraansluiting EN ISO 228-1 G 3/4

SCHEMA DI INSTALLAZIONE INSTALLATION DIAGRAM INSTALLATIONSPLAN SCHEMA DE INSTALLATION ESQUEMA DE INSTALACIÓN	**MODELLO** PIANO COTTURA ELETTRICO DROP IN ELECTRIC COOKING TOP DROP IN ELEKTROKOCHFELD DROP IN TABLE DE CUISSON ELECTRIQUE DROP IN PLANO DE COCCION ELÉCTRICO DROP IN	DATA 18/12/2014 DISEGNATORE Possamai F. CONTROLLATO Possamai F. **FOGLIO: 1/1**	**CODICE** **2551077.00**

LA DITTA SI RISERVA, A TERMINI DI LEGGE, LA PROPRIETA' DI QUESTO DISEGNO CON DIVIETO DI RIPRODURLO O RENDERLO PUBBLICO A TERZI SENZA LA SUA AUTORIZZAZIONE

VII. FIGURE – ABB. – FIG. FIGURE-FIG.-IMAGE-ABB.-CIFRAS-AFBEELDINGEN

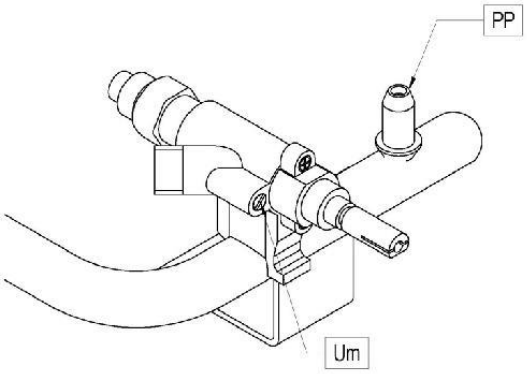

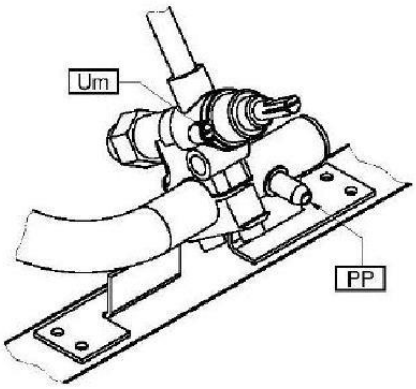

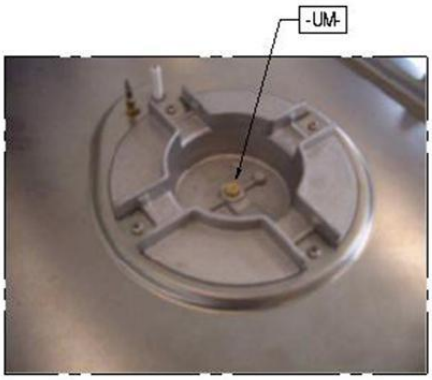

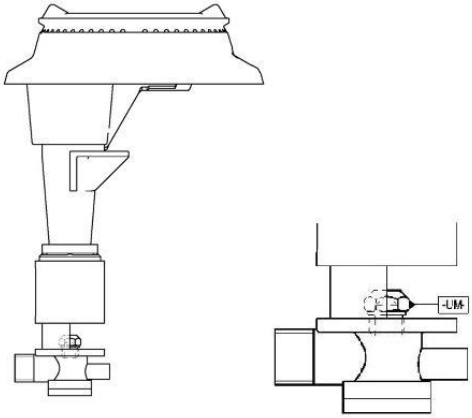

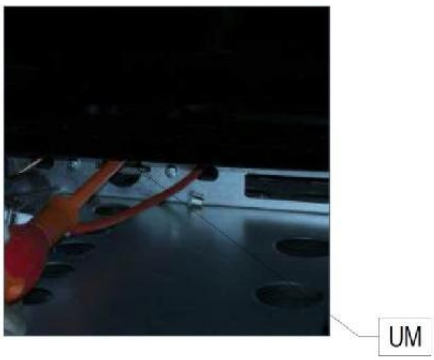

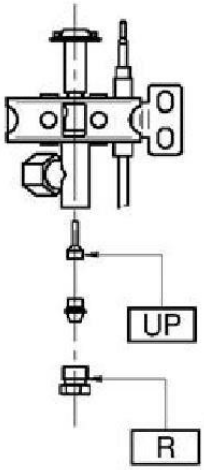

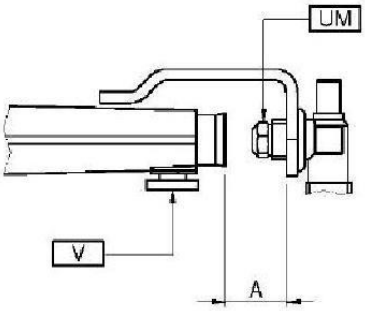

VIII. TAB1 - DATI TECNICI - TECHNICAL DATA - TECHNISCHE DATEN - CARACTERISTIQUES TECHNIQUES - DATOS TECNICOS - TECHNISCHE GEGEVENS Ugelli e regolazioni - Nozzles and settings - Buses et les paramètres - Dusen und Einstellungen - Boquillas y los ajustes - Verstuivers en regelingen

		TAB1														
		UM	_600					_650								
Gas Gaz	Pa (mbar)	UP	FA	FA	FA/P	FA/P	FG	FA	FA	FA	FA	FA/P	FA/P	FG	FGG	TP
		A	2.8	3.3	3.3	3.6	2.3	3.6	5	7.5	8.8	3,7	5.5	5	7.5	8.2
		Um	kW	kW	kW	kW	kW	kW	kW	kW	kW	kW	kW	kW	kW	kW
G20 G20/G25	20 20/25	UM	115	135	130	140	113	142	175	215	225L	145	180	180	230	215L
		UP	-	-	-	-	-	-	-	35	35	35	35	-	-	35
		A (mm)	-	-	-	-	-	2	3	2.5	24	3	12	0	8	26
		Um	REG	REG	REG	REG	-	REG	REG	REG	REG	REG	REG	REG	REG	REG
G25	20	UM	134	145	152	157	128	160	200	230	250L	160	200	200	255	240L
		UP	-	-	-	-	-	-	-	35	35	35	35	-	-	35
		A (mm)	-	-	-	-	-	2	3	2.5	24	3	12	0	8	26
		Um	REG	REG	REG	REG	-	REG	REG	REG	REG	REG	REG	REG	REG	REG
G25	25	UM	121	138	137	150	120	142	175	215	225L	145	180	180	240	215L
		UP	-	-	-	-	-	-	-	35	35	35	35	-	-	35
		A (mm)	-	-	-	-	-	2	3	2.5	24	3	12	0	8	26
		Um	REG	REG	REG	REG	-	REG	REG	REG	REG	REG	REG	REG	REG	REG
G20	25	UM	113	124	123	132	106	-	-	-	-	-	-	-	-	-
		UP	-	-	-	-	-	-	-	-	-	-	-	-	-	-
		A (mm)	-	-	-	-	-	-	-	-	-	-	-	-	-	-
		Um	REG	REG	REG	REG	-	-	-	-	-	-	-	-	-	-
G25.1	25	UM	132	138	137	152	128	-	-	-	-	-	-	-	-	-
		UP	-	-	-	-	-	-	-	-	-	-	-	-	-	-
		A (mm)	-	-	-	-	-	-	-	-	-	-	-	-	-	-
		Um	REG	REG	REG	REG	-	-	-	-	-	-	-	-	-	-
G30/G31	28-30/37 28-30	UM	85	95	95	100	76	97	113	140	150L	95	120	120	150	145L
		UP	-	-	-	-	-	-	-	20	20	20	20	-	-	20
		A (mm)	-	-	-	-	-	0	0	OPEN	27	3	14	0	9	14
		Um	44	65	44	65	-	60	60	90	80	50	70	55	85	90
G30/G31	37	UM	80	87	89	95	72	-	-	-	-	-	-	-	-	-
		UP	-	-	-	-	-	-	-	-	-	-	-	-	-	-
		A (mm)	-	-	-	-	-	-	-	-	-	-	-	-	-	-
		Um	44	65	44	65	-	-	-	-	-	-	-	-	-	-
G30/G31	50	UM	75	75	80	80	67	85	105	120	135L	85	105	100	130	130
		UP	-	-	-	-	-	-	-	20	20	20	20	-	-	20
		A (mm)	-	-	-	-	-	2	7	3.5	27	3	12	0	9	28
		Um	44	65	44	65	-	60	60	90	70	45	60	55	75	90
G110	8	UM	280	315	280	315	225	280	360	470	460L	280	350	480LF	-	450L
		UP	-	-	-	-	-	-	-	35	REG	REG	REG	-	-	REG
		A (mm)	-	-	-	-	-	1.5	2.5	OPEN	25	3	1	OPEN	-	25
		Um	OPEN	OPEN	OPEN	OPEN	-	REG	REG	REG	REG	REG	REG	REG	-	REG
G120	8	UM	258	300	258	300	210	265	320	-	-	265	330	460L	-	425L
		UP	-	-	-	-	-	-	-	-	-	REG	REG	-	-	REG
		A (mm)	-	-	-	-	-	1.5	2.5	-	-	3	2	OPEN	-	32
		Um	OPEN	OPEN	OPEN	OPEN	-	REG	REG	-	-	REG	REG	REG	-	REG

Pa : Pressione di allacciamento - Anschlussdruck - Supply pressure - Pression de raccordement - Pressión de conexión - Aansluitdruck

UM : Ugello MAX - Duse MAX - MAX nozzle - Buse MAX - Boquilla MAX. - Sproeier MAX

Um : Ugello MIN - Duse MIN - MIN nozzle - Buse MIN - Boquilla MIN - Sproeier MIN

UP : Pilota - Zùndbrenner - Pilot - Veilleuse gaz - Piloto - Waakvlam

A : Apertura Aereatore - Óffnen Luftring - Aerator Opening - Ouverture Aérateur - Abertura del aireador - Opening beluchter

FA : Fuocho aperto - Offene Kochstellen - Open burner - Feux vifs - Fuego abietto - Open brander

FG : Forno - Backofen - Oven - Four - Hornos - Oven

FGG : Forno maxi - Backofen maxi - Oven maxi - Four à maxi - Horno maxi - Oven maxi

TP : Tuttapiastra - Glùhplatte - Cooking hot piate - Plaque coup-de-feu - Placas radiantes - Gloeiplaathaard

REG : Regolato - Eingestellt - Regulated - Règie - Regulado - Geregeld

P : Piastra riscaldante - Warmplatte - Warming piate - Plaque chauffante - Placa de calentamiento - Straalplaten

(1) Boccola con diametro interno 16mm - Lufthùlse mit innendurchmesser 16mm benùtzen - Use air regulator with inner diameter of 16mm - Utiliser le régulation de l'air ayant un diamètre intérieur de 16mm - Utilizar le regulador de aire con diàmetro interior 16mm - Gebruik luchtregelaar met een inwendige diameter van 16mm

* by pass 100 da tutto chiuso aperto 2 giri

**by pass 120 da tutto chiuso aperto 3 giri

TAB2 - DATI TECNICI - TECHNICAL DATA - TECHNISCHE DATEN - CARACTERISTIQUES TECHNIQUES - DATOS TECNICOS - TECHNISCHE GEGEVENS Categorie e pressioni - Categories and pressures - Catégories et pressions - Kategorien e Druck - Las categorías y las presiones - Categorieën en druk

Paese Land Country Pays Pais	Categoria Kategorie Category Catégorie Categoria Categorie	Gas-Gaz	Pressione di allacciamento Anschlussdruck Supply pressure Pression de raccordment Pression de conexion Aansluitdruck (mbar)		
			Nom. Neen. Norm. Normal	Min.	Max
PL	I2E	G20	20	17	25
LU CY	I3+	G30/G31	28-30/37	20/25	35/45
NO CY MT IS HU	I3B/P	G30/G31	28-30	25	35
PL	I3B/P	G30/G31	37	25	45
BE FR	II2E+3+	G20/G25	20/25	17/20	25/30
		G30/G31	28-30/37	20/25	35/45
DE	II2ELL3B/P	G20	20	17	25
		G25	20	18	25
		G30/G31	50	42,5	57,5
ES GB GR IE IT PT SK CH	II2H3+	G20	20	17	25
		G30/G31	28-30/37	20/25	35/45
MK UA FI BG EE LV LT CZ SI TR HR RO SK SE DK AL NO RA	II2H3B/P	G20	20	17	25
		G30/G31	28-30	25	35
AT CH	II2H3B/P	G20	20	17	25
		G30/G31	50	42,5	57,5
HU	II2HS3B/P	G20	25	18	33
		G25.1	25	18	33
		G30/G31	28-30	25	35
		G30/G31	50	42,5	57,5
SE	III1ab2H3B/P	G20	20	17	25
		G30/G31	28-30	25	35
		G110	8	6	15
		G120	8	6	15
DK IT	III1a2H3B/P	G20	20	17	25
		G30/G31	28-30	25	35
		G110	8	6	15
NL	II2L3B/P	G25	25	20	30
		G30/G31	28-30	25	35
LU	II2E3+	G20	20	17	25
		G30/G31	28-30/37	20/25	35/45

IX. TAB3 - DATI TECNICI - TECHNICAL DATA - TECHNISCHE DATEN - CARACTERISTIQUES TECHNIQUES - DATOS TECNICOS - TECHNISCHE GEGEVENS Dati tecnici apparecchiature gas - Technical data of gas appliances - Caractéristiques techniques des appareils à gaz - Technische Daten gasgerate - Datos técnicos de los equipos de gas - Technische gegevens gasapparatuur

TAB.3

Modelli Modelle Models Modeles Modelos Modellen	Larghezza Breite Width Largeur Anchura Breedte	FA 2.8 kW	FA 3.3 kW	FA 3.6 kW	FG 2.5 kW	ΣQn	Σqn G110 (8)	Σqn G120 (8)	Consumo gas complessivo - Gasamtgasverbrauch - Total gas consumption - Consommation totale de gaz - Consumo totral de gas - Totaal gasverbruik									
									G20 (20)	G25 (25)	G25 (20)	G20 (25)	G25.1 (25)	G110 (8)	G120 (8)	G30 (29)	G30 (37)	G30 (50)
	mm	Nr.°	Nr.°	Nr.°	Nr.°	kW	kW	kW	m3/h	m3/h	m3/h	m3/h	m3/h	m3/h	m3/h	Kg/h	Kg/h	Kg/h
_60/40 PCG-D	400	1	1			6.1	8.3	8.3	0.65	0.75	0.75	0.65	0.75	2.14	1.91	0.48	0.48	0.48
_60/60 PCG-D	600	2	2			12.2	16.6	16.6	1.29	1.5	1.5	1.29	1.5	4.28	3.81	0.96	0.96	0.96
_60/30 PCG	300	1	1			6.1	8.3	8.3	0.65	0.75	0.75	0.65	0.75	2.14	1.91	0.48	0.48	0.48
_60/30 PCG/P	300		1	1		6.9	13	13	0.73	0.85	0.85	0.73	0.85	3.35	2.98	0.54	0.54	0.54
_60/60 PCG	600	2	2			12.2	16.6	16.6	1.29	1.50	1.50	1.29	1.50	4.28	3.81	0.96	0.96	0.96
_60/60 PCG/P	600		2	2		13.8	26	26	1.46	1.70	1.70	1.46	1.70	6.71	5.97	1.09	1.09	1.09
_60/90 PCG	900	2	3			15.5	22.1	22.1	1.64	1.91	1.91	1.64	1.90	5.70	5.07	1.22	1.22	1.22
_60/90 PCG/P	900		2	3		17.4	33.5	33.5	1.84	2.14	2.14	1.84	2.14	8.65	7.69	1.37	1.37	1.37
_60/60 CFG	600	2	2			12.2	16.6	16.6	1.29	1.50	1.50	1.29	1.50	4.28	3.81	0.96	0.96	0.96
_60/60 CFGE	600	2	2			12.2	16.6	16.6	1.29	1.50	1.50	1.29	1.50	4.28	3.81	0.96	0.96	0.96
_60/60 CFGE/P 2/3	600	2	2			12.2	16.6	16.6	1.29	1.50	1.50	1.29	1.50	4.28	3.81	0.96	0.96	0.96
_60/90 CFGE	900	2	3			15.5	22.1	22.1	1.64	1.91	1.91	1.64	1.90	5.70	5.07	1.22	1.22	1.22
_60/90 CFGE/P	900		2	3		17.4	33.5	33.5	1.84	2.14	2.14	1.84	2.14	8.65	7.69	1.37	1.37	1.37

TAB.3																								
Modelli Modelle Models Modeles Modelos Modellen	Larghezza Breite Width Largeur Anchura Breedte	FA 3.5 kW	FA 3.6 kW	FA 5 kW	FA 7.5 kW	FG 5 kW	FA 3.7 kW	FA 5.5 kW	FG 7.5 kW	TP 8.2 kW	ΣQn	Σqn G110 (8)	Σqn G120 (8)	Consumo gas complessivo - Gasamtgasverbrauch - Total gas consumption - Consommation totale de gaz - Consumo totral de gas - Totaal gasverbruik										
														G20 (20)	G25 (25)	G25 (20)	G20 (25)	G25.1 (25)	G110 (8)	G120 (8)	G30 (29)	G30 (37)	G30 (50)
	mm	Nr.°	Nr.°	Nr.°	Nr.°	Nr.°	Nr.°	Nr.°	Nr.°	Nr.°	kW	kW	kW	m3/h	m3/h	m3/h	m3/h	m3/h	m3/h	m3/h	Kg/h	Kg/h	Kg/h
_65/40 PG/40 P	400				1						7.5	-	-	0.79	0.92	0.92	0.79	0.92	-	-	0.59	0.59	0.59
_65/40 PCG	400		1	1							8.6	8.6	8.6	0.91	1.06	1.06	0.91	1.06	2.22	1.97	0.68	0.68	0.68
_65/70 PCG	700		2	2							17.2	17.2	17.2	1.82	2.12	2.12	1.82	2.11	4.44	3.95	1.36	1.36	1.36
_CEG/70	700		2	2							17.2	17.2	17.2	1.82	2.12	2.12	1.82	2.11	4.44	3.95	1.36	1.36	1.36
_CEG/110	1100		3	3							25.8	25.8	25.8	2.73	3.18	3.18	2.73	3.17	6.66	5.92	2.03	2.03	2.03
_65/40 PCG/P	400						1	1			9.2	9.2	9.2	0.97	1.13	1.13	0.97	1.13	2.37	2.11	0.73	0.73	0.73
_65/70 PCG/P	700						2	2			18.4	18.4	18.4	1.95	2.26	2.26	1.95	2.26	4.75	4.22	1.45	1.45	1.45
_65/70 CFG	700		2	2		1					22.2	22.2	22.2	2.35	2.73	2.73	2.35	2.73	5.73	5.10	1.75	1.75	1.75
_65/70 CFGE	700		2	2							17.2	17.2	17.2	1.82	2.12	2.12	1.82	2.11	4.44	3.95	1.36	1.36	1.36
_65/110 CFG	1100		3	3		1					30.8	30.8	30.8	3.26	3.79	3.79	3.26	3.78	7.95	7.07	2.43	2.43	2.43
_65/110 CFGE	1100		3	3							25.8	25.8	25.8	2.73	3.18	3.18	2.73	3.17	6.66	5.92	2.03	2.03	2.03
_65/110 CFGG	1100		3	3					1		33.3	-	-	3.52	4.10	4.10	3.52	4.09	-	-	2.63	2.63	2.63
_65/70 TPG	700									1	8.2	8.2	8.2	0.87	1.01	1.01	0.87	1.01	2.12	1.88	0.65	0.65	0.65
_65/70 TPFG	700					1				1	13.2	13.2	13.2	1.40	1.62	1.62	1.40	1.62	3.41	3.03	1.04	1.04	1.04
_65/110 TPFG	1100		1	1		1				1	21.8	21.8	21.8	2.31	2.68	2.68	2.31	2.68	5.63	5.01	1.72	1.72	1.72
_FPG/55	550	1									3.5	-	-	0.37	0.43	0.43	0.37	0.43	-	-	0.28	0.28	0.28

X. TAB4 - DATI TECNICI - TECHNICAL DATA - TECHNISCHE DATEN - CARACTERISTIQUES TECHNIQUES - DATOS TECNICOS- TECHNISCHE GEGEVENS Dati tecnici apparecchiature elettriche - Dati tecnici aTechnical data of electric appliances - Caractèristiques techniques des appareils electriques - Technische Daten Elektrogerate - Datos técnicos de los equipos eléctricos - Technische gegevens elektrische apparatuur

TAB.4

Modelli Modelle Models Modeles Modelos Modellen	Larghezza Breite Width Largeur Anchura Breedte	Tensione di alimentazione Netzspannung Power supply voltage Tension d'alimentation Tension de alimentacion Voedingsspanning	Fasi Phasen Phases Fases Fasen	Frequenza Frequenz Frequency Fréquence Frecuencia Frequentie	Piastre Platten Plates Plaques Planchas Planten	Potenza massima piastre Hochstleistung platten Max. power plates Puissance maximun des plaques Potencia maxima plancas Maximumvermogen platen	Potenza massima forno Hochstleistung backofen Max. power ovev Puissance maximun du four Potencia maxima horno Maximumvermogen oven	Potenza totale massima Max. gesamtleistung Max. total power Puissance totale maximun Potencia maxima total Max totaal vermogen	Sezione cavo alimentazione Querschnitt netzkabel Power supply cable section Section du cable de alimentation Seccion del cable de alimentacion Doorsnede elektrisch snoer
	mm	V	Nr. No. Nbre N. A ant.	Hz	Nr. No. Nbre N. A ant.	kW	kW	kW	_
_60/40 PCE-D	400	380-415	3N	50-60	2	3		3	5G1.5
_60/60 PCE-D	600	380-415	3N	50-60	4	6		6	5G1.5
_60/30 PCE	300	380-415	3N	50-60	2	3		3	5G1.5
_60/30 PCE/P	300	380-415	3N	50-60	2	4		4	5G1.5
_60/30 PCE21/P	300	220-240	1N	50-60	2	4		4	3G2.5
_60/60 PCE	600	380-415	3N	50-60	4	6		6	5G1.5
_60/60 PCE/P	600	380-415	3N	50-60	4	8		8	5G2.5
_60/60 PCE21/P	600	220-240	1N	50-60	4	8		8	3G2.5
_60/90 PCE	600	380-415	3N	50-60	5	7.5		7.5	5G2.5
_60/90 PCE/P	600	380-415	3N	50-60	5	10		10	5G2.5
_60/60 CFE	600	380-415	3N	50-60	4	6	2.3	8.3	5G2.5
_60/60 CFE/P 2/3	600	380-415	3N	50-60	4	8	3	11	5G2.5
_60/90 CFE	600	380-415	3N	50-60	4	7.5	3	10.5	5G1.5
_60/90 CFE/P	600	380-415	3N	50-60	4	10	3	13	5G2.5
_60/60 CFGE	600	220-240	1N	50-60			2.3	2.3	3G1.5
_60/60 CFGE/P 2/3	600	220-240	1N	50-60			3	3	3G1.5
_60/90 CFGE	600	220-240	1N	50-60			3	3	3G1.5
_60/90 CFGE/P	600	220-240	1N	50-60			3	3	3G1.5
_65/40 PCE	400	380-415	3N	50-60	2	5.2			5G1.5

Modelli Modelle Models Modeles Modelos Modellen	Larghezza Breite Width Largeur Anchura Breedte	Tensione di alimentazione Netzspannung Power supply voltage Tension d'alimentation Tension de alimentacion Voedingsspanning	Fasi Phasen Phases Fases Fasen	Frequenza Frequenz Frequency Fréquence Frecuencia Frequentie	Piastre Platten Plates Plaques Planchas Planten	Potenza massima piastre Hochstleistung platten Max. power plates Puissance maximun des plaques Potencia maxima plancas Maximumvermogen platen	Potenza massima forno Hochstleistung backofen Max. power ovev Puissance maximun du four Potencia maxima horno Maximumvermogen oven	Potenza totale massima Max. gesamtleistung Max. total power Puissance totale maximun Potencia maxima total Max totaal vermogen	Sezione cavo alimentazione Querschnitt netzkabel Power supply cable section Section du cable de alimentation Seccion del cable de alimentacion Doorsnede elektrisch snoer
	mm	V	Nr. No. Nbre N. A ant.	Hz	Nr. No. Nbre N. A ant.	kW	kW	kW	_
_65/70 PCE	700	380-415	3N	50-60	4	10.4			5G2.5
_65/70 CFE	700	380-415	3N	50-60	4	10.4	3.96	14.36	5G4
_65/70 CFGE	700	380-415	3N	50-60			3.96	3.96	5G1
_65/110 CFGE	1100	380-415	3N	50-60			3.96	3.96	5G1
_FPE/55	550	380-415	3N	50-60	1	8.8		3.5	5G1